LAPPEENRANTA UNIVERSITY OF TECHNOLOGY
Faculty of Technology
Department of Mechanical Engineering
BK10A0300 Bachelor's thesis

BACHELOR'S THESIS:

Development of the guide roller system of a portal gantry crane

Lappeenranta 21.11.2008

Ossi Viiala 0280243

TABLE OF CONTENTS

1 ABSTRACT

This bachelor's thesis has been written during the summer 2008 in Andritz inc. in Roswell USA. Andritz inc. is a part of the international Andritz Group, which mother company is Andritz AG in Austria. Andritz Group's main business areas cover processes and equipment for pulp and paper industry, complete pulp mills, hydropower plants, picking lines for steel industry, environment technology and community waste handling plants as well as pelletizing lines for animal feed. The turnover is app. 3 600 million € and it employs 12 000 people.

The focus of this thesis is to study the problems of traveling motion of a portal log yard crane. When the crane travels on rails it can twist around its vertical axis which prevents normal movement of the crane. This phenomenon is called skewing. The skewing is caused by braking and acceleration of the crane, condition of the rails, uneven speed of the trucks and external horizontal forces e.g. wind. The skewing leads to a heavy wearing of the gantry wheels. In order to prevent the wearing and the breakage of the gantry wheels the end trucks have been equipped with a guide roller system which takes the skewing forces before the flange of the gantry wheel hits the rail. Andritz has patented the guide roller structure, U.S pat. No. 5,575,220.

The existing guide roller structure has not met the required operational life time and the aim of this study is to develop a new structure for the guide roller system. The load spectrum will be determined based on the knowledge of the breakages and the analysis of the existing structure. This load spectrum will be the basis for the development of the new structure from the fatigue point of view. FE analyses and traditional methods of machine design and product development are essential means for developing the new solution.

The thesis begins with analysis of the reasons and implications of the skewing phenomena to the guide roller breakages. The literature part of the study concerns fatigue of the welded structures and related stress and load categories. FE methods and calculation procedures will also be described.

The thesis has been made for the Faculty of Technology in Lappeenranta University of Technology and it is a part of the Bachelor's degree programme in Mechanical Engineering. On the behalf of Andritz inc. the work has been supervised
by Mr. Janne Lähteenmäki, M.Sc.

2 INTRODUCTION OF THE CRANE AND THE PROBLEM

2.1 The log yard crane

The log yard crane is a portal gantry crane used in forest industry. It receives stores and unloads logs at the log yards. The crane travels on rails, which rest on ballast foundations. Even after a thorough rail assembly work the rails have horizontal and vertical straightness errors. Therefore the structure of the crane is flexible to move along the rails. The crane consists of two main parts which are the body and the trolley. The structure of the crane is shown in figure 1. (Lähteenmäki 2008.)

The structure consists of two leg frames, the main girder and eight end trucks. The main girder connects the leg frames and also works as a support for the trolley rails. The fixed leg frame consists of four legs creating a rigid support for the main girder. The fixed leg frame prevents the lengthwise movement of the girder. On the other side of the crane there is a hinged leg frame. The hinged frame is jointed to the girder with pins and therefore the deflection of the girder will not cause horizontal forces to the rails during load lifting. If the both leg frames are attached as a fixed support to the main girder, the spread of the legs will also cause horizontal forces on the trucks. Also as a totally fixed leg structure the changes in the distance between the rails would cause unnecessary loads on the structure. (Lähteenmäki 2008.)

The end trucks are presented in figure 2. The crane has end trucks on each four corners and every truck has two, three or four two flanged wheels depending on the size of the crane. The wheels can be free rolling idler wheels or motorized wheels depending also on the size of the crane. There are two guide rollers per end truck to prevent the flange contact to the rails. The purpose of the guide rollers is to increase the operating life time of the rails and the wheels. (Lähteenmäki 2008.)

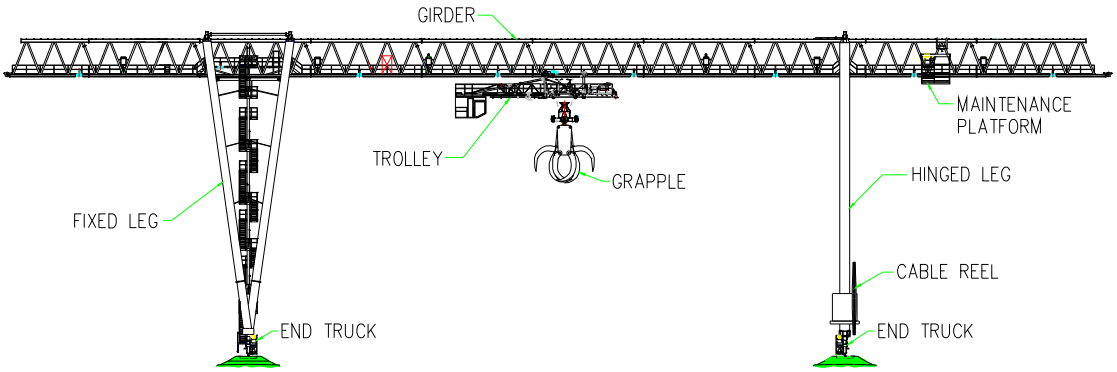

Figure 1. The structure of the portal crane

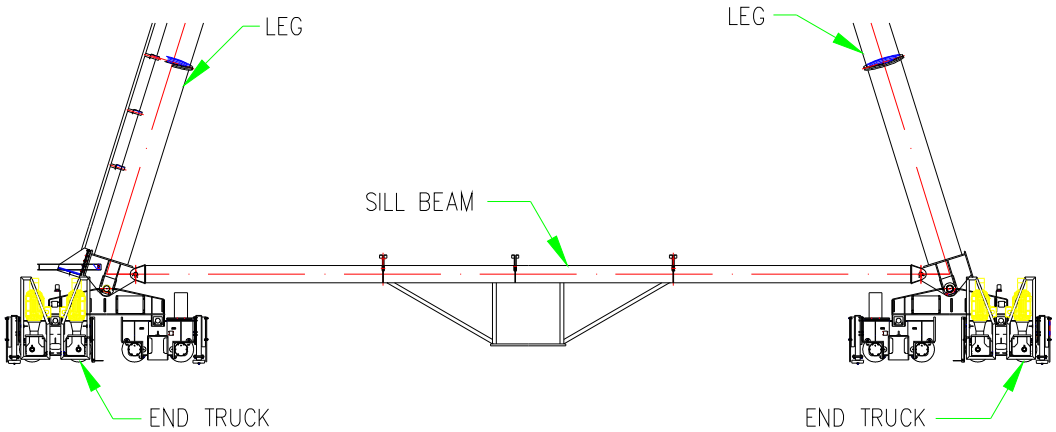

Figure 2. The end trucks of the crane

The other main part of the crane is the trolley which moves along the main girder. The grapple and the hoist machinery are mounted to the trolley. Also the operator's cabin is attached to the trolley. The cabin location is ideal for the operator to see the grapple. (Lähteenmäki 2008.)

2.2 The crane traveling

In an ideal case when the rails are perfectly parallel to each other, the crane moves along the rails so that the flanges of the gantry wheels do not have a contact with the rail and there are no horizontal supporting forces causing wheel wearing. Also the gantry wheels should be self-centralized and the rails should be tied together ensuring the distance between the rails stay constant.

At the log yards the rails are not tied together and not perfectly parallel to each other. The rails rest on ballast foundation which can fail in the course of time and cause the rail bent. The rail bent causes errors and sways in crane traveling, which also means that the flange contact will occur between the rail and the gantry wheel. The rail bent is shown in figure 3. (Lähteenmäki 2008.)

Figure 3. The rail on the ballast foundation

The rail bent is not the only matter which affects the portal crane traveling along the rails. The deflections of the girder and the external forces will also have an effect. Wind loads, trolley movements and the crane travelling itself causes wearing to the gantry wheels. Loads from wind and from the trolley are horizontal forces, which affect the trucks through the fixed two leg frames. These forces split evenly on the wheels. The gantry wheels are exposed also to the skewing forces. The skewing forces are lateral forces which occur when the crane is traveling and at the same time twisting around its vertical axis. When the crane is skewing the gantry wheels at the corners of the trucks will seize to the rails.
(SFS Nosturit 1982, p. 35–48; Lähteenmäki 2008.)

The forces from the skewing are applied at the trucks via both the fixed and the hinged leg frames. When the crane skews, the flange contact area is not plane with the rail. Crane's turning angle in the skew is not great but its effect is significant. The skewing is at its worst when the trolley is at the end of the main girder with full log load. When the crane accelerates or slows down and the trolley and the log load is far away from the cranes central axis, inertial forces or the difference between the speeds of the end trucks will cause skewing. To decrease the flange contact caused by the facts above, the end truck has guide rollers. Without the guide rollers the flanges of the gantry wheels will wear fast. It is also notable that when the crane is skewing the gantry wheels are also subjected to sliding. (Lähteenmäki 2008.)

2.3 The present guide roller structure

The guide rollers are located at the ends of the end trucks. The main purpose of the guide rollers is to decrease flange contact to the rail and to guide the crane to travel straight on the rails. The roller assembly itself is attached to the guide roller structure with a bolt connection to ease the service. The roller assembly is bolted to steel tube or leg which is welded on a base plate. The whole guide roller structure is bolted from the base plate to the end truck. The guide roller structure is shown in figure 4.

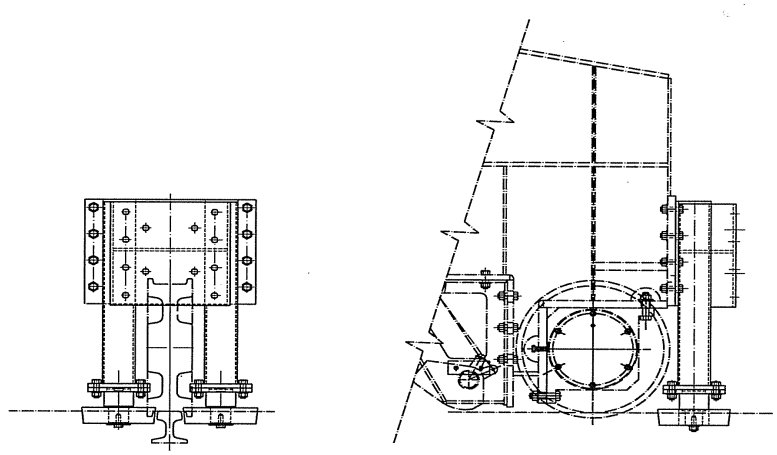

Figure 4. The present guide roller structure

The guide rollers carry the side forces before the flange of the gantry wheels contact the rail, when the crane is operating. When the guide roller contacts the rail the leg of the guide roller structure will be subjected to bending. The idea of the guide roller structure is based on the free bending length of the steel tube. The force components affecting the guide rollers are skewing forces, forces from the rail bent and other external forces discussed above. Also the rail misalignment and the weld joints at the rails cause loads to the rollers. Especially misalignments and weld joints subject the rollers to impact loads.

The weld joint between the base plate and the steel tube (the leg) has cracked and gradually failed under the normal operating conditions. The welds have failed within two years operating time which is much less than the acceptable operating life time. The bearings in the rollers have also failed and the rollers have suffered from heavy wearing. The most likely causes for bearing failures are the impact loads and the geometry of the rollers. During crane traveling the guide roller passes the weld joints and the misalignments at the rails and those two matters cause the impact loads. The geometry of the roller is a cone so the cone shape itself produces heavy axial loads to the bearings. The cone shape causes speed differences on the slide surface of the roller subjecting the roller to sliding, which leads to roller wearing.

The rail bent is not necessarily the cause for the bearing failures, because the nature of the load is not impact type. The weld cracking is caused more likely by bending forces. In any case it is important to notice that all the load cases affect the crack growth in welded structures.

One possible reason for the early failure of the guide roller structure is sloppy adjustment of the wheels while the adjustment system is not service friendly. The guide rollers are supposed to be adjusted on the right distance from the rail to decrease the loads. If the guide rollers were located too close to the rail, forces would become too high breaking the structure. If the guide rollers were adjusted too far away from the rail, the guide rollers would not work at all and the flange of the gantry wheel would contact the rail. The purposes of the rollers are to decrease the flange contacts, not to prevent them totally. Figure 5 shows a roller adjusted too close.

Figure 5. A guide roller adjusted too close

3 FATIGUE OF WELDED STRUCTURES

3.1 Fatigue of welded joints

The welded structures are vulnerable for fatigue. The fatigue starts normally from small welding defects which can grow during the use of the structure. The crack itself is the worst geometric defect in the material and it will cause a high stress concentration. The operating life time of the structure is used, when the cracks have grown so large that the structure will fracture or the remaining cross section will no longer stand the worst load situation. (Niemi & Marquis & Poutiainen 2005, p. 18–20;
Niemi & Kemppi 1993, p. 229–231; Niemi 2003, p. 92–94.)

The fatigue strength of the welded structure is defined by the stress range which causes the failure of the structure after a specified number of cycles. The number of cycles to failure is known as fatigue life. The stress range can be obtained from the stress history and it is the most important factor in fatigue analyses. The stress range is the difference between the maximum and minimum points in the cycle. Normally the loads on welded structures are variable amplitude loads. In those cases the stress range is caused by the magnitude and the direction of the load, the change in direction or location of the load or change in temperature. Also vibrations, impulses and changes in accelerations cause alternating stress ranges. (Niemi & Kemppi 1993, p. 239; Niemi 1996, p. 7–8; IIW document XIII–1965–03 2005, p. 18–19; Dowling 2007, p. 393–394.)

Normally small cracks can be located at the weld toe because the geometry of the weld produces the worst stress concentration. The amount and the criticality of these discontinuity points are tried to be controlled by the quality assurance methods. In spite of quality control the welded structures can always have initial cracks so even a thorough welding process cannot guarantee unlimited operating life time. (Niemi & Kemppi 1993, p. 229–231; Niemi & Marquis & Poutiainen 2005, p. 18–19.)

The strength of the welded structures against the fatigue can be improved especially by good designing. For example the welds can be placed where the changes in stress range are small. Using larger cross sections make the stress range smaller but the weight of the

structure will increase. Thus by using thinner plates with high tensile strength the weight of the structure can be reduced but the stress ranges will increase. The fatigue life does not depended on the strength of the steel, only the amplitude of the stress range matters. (Lehtinen 2005, p. 196.)

3.2 Stress categories in the fatigue analyses

The fatigue of the structure can be studied by using different methods depending on which discontinuity points or notches are involved in the analyses. The stresses used in fatigue design can be categorized as nominal stresses, structural stresses and notch stresses. These are caused by live loads, dead loads, snow or wind loads, vibrations etc. (Niemi & Kemppi 1993, p. 231; Niemi 1996, p. 7.)

The most important part of the fatigue analyses is load estimation. Estimation of the loads can be determinate by regulations or certain methods, but the most important aspect is that the most critical stress ranges are studied. It is important to take also the small ones into account because smaller stresses are normally the largest group in the load history and therefore the most critical ones. (Niemi 1996, p. 9.)

3.2.1 Nominal stress

The nominal stresses can be determined using elementary theories of structural mechanics based on linear-elastic behavior. From the fatigue calculating point of view all the local stress raising effects of the welded joint are not included. However, all the stress raisers of the macro geometric shape of the component in the vicinity of the joint must be included. For example holes or other cutouts are macro geometric effects. (Niemi 1996, p. 7; IIW document XIII–1965–03 2005, p. 22–25.)

3.2.2 Structural stress

Structural stress consists of membrane stress and bending stress. The structural stress in the plate is shown in figure 6, where σ_m is the membrane stress and σ_b is the plate's bending stress. It is important to notice that the plate's bending stress is not the same thing as the bending stress in beams. The analytical calculation approach is normally impossible. Different stress components of structural stress are shown in figure 6. (Niemi 1996, p. 7.)

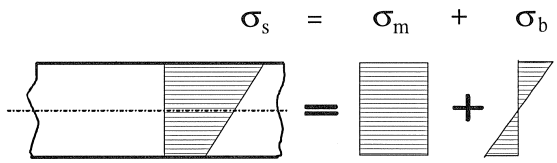

Figure 6. Structural stress (Niemi 1996, p. 7.)

Structural stress includes nominal stress and all the structural discontinuities. The peak value of the structural stress caused by a local notch is called hot spot stress. It is the critical value considering the crack growth phenomena. Even though the hot spot point is located at the local notch the peak stress caused by a local notch is not included to the structural stress value. (Niemi 1996, p. 7–8.)

3.2.3 Effective notch stress

Effective notch stress is the total stress at the root of a notch for example at the weld toe. The effective notch stress is a sum of membrane stress, the plate's bending stress and the non linear stress peak of the notch. The non linear stress peak is a component of the notch stress which exceeds the linearly distributed structural stress at a local notch. The effective notch stress can be compared with a common fatigue resistance curve when determining the fatigue life of the object. Different stress components of the effective notch stress are shown in figure 7. (Niemi 1996, p. 8.)

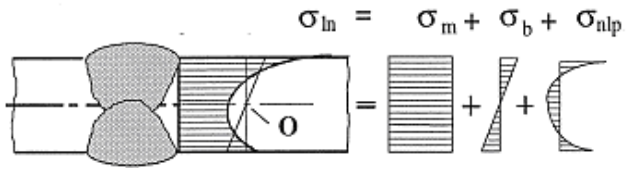

Figure 7. Notch stress (Niemi 1996, p. 8.)

4 OPERATING LIFE TIME OF THE PRESENT STRUCTURE

4.1 Determination of the most critical point

The most critical point of the guide rollers structure is the farthest weld between the leg and the base plate. That particular weld point was known to be a potential candidate to fatigue based on field experiences. The weld root has been cracked in normal operations. The critical weld is presented more thoroughly in chapter 4.2.1 in figure 8.

The steel tubes' large corner radius will make the weld vulnerable to factory defects and it is potential for crack growth. Moreover the weld is not as long as the base plate. The shorter weld allows the structure to be more flexible. When the weld ends before the base plate the ending point cannot be grinded properly after the welding and thus it is a potential crack location.

The critical weld will be studied by using FE-analyses. The purpose is to define the load, which causes a 9 mm displacement on the guide roller. The 9 mm displacement allows the flange of the gantry wheel to hit the rail. Other loads are caused by the two skewing cases. The 1 ft skew occurs in normal crane operations when the end trucks of the leg frame are one foot ahead of the other leg frames. The 3 ft skew can occur only under special conditions. The purpose is to define a load spectrum for the present guide roller structure based on the critical joint's operating life time. The load spectrum will be used when designing a new guide roller structure.

4.1.1 Fatigue calculation based on the effective notch stress

The critical weld will be studied by using the effective notch method, because it is suitable for cases where the crack starts from the weld root. The effective notch method is also applicable to study insufficient penetrations, the shape of the weld and the effects of the weld toe geometry improvements. The nonlinear material behavior of the notch root is taken into account in this method when defining the actual notch stress. The radius of the effective notch is 1 mm and the arc of the notch will be placed to be tangent to the crack. This method is applicable to the plate thicknesses over 5 mm. This method with FE analysis will be described in more detail in chapter 4.2. (Niemi 2003, p. 106.)

When defining the expected operating life time by using the effective notch method, the FAT 270 class will be used. The FAT 270 curve is an average curve which presumes that 50 % of all the cases will last the calculated life and correlates the real life without the safety factor.

4.2 Analyses of the structure

4.2.1 Finite element analysis in the process of computer aided design

The use of finite element method (FEM) helps designers to solve physical problems in engineering design. FEM is a numerical method for finding approximate solutions for deflections and stresses of the structure. FE analysis solves the mathematical element model based on the information given in the model. The creation of the geometry is the first step of the finite element analysis with computer-aided design. The material properties, applied loads and boundary conditions on the geometry are also defined. It is important that the model is not too detailed or too simplified. All the details have an effect on the element mesh which will reflect on the results. In the future the element meshes will be more and more created automatically by the programs themselves until the required solution accuracy has been achieved. (Bathe 1996, s. 2–17;
Ikonen & Kantola 1986, p. 195.)

4.2.2 Modeling of the structure for FE analysis

The present guide roller design was analyzed by using the Ansys WorkBench–program. For the analyses the structure was modeled from 2D drawings to 3D model with the Autodesk Inventor 3D program. The structure was simplified to be more suitable for FE analyses. The 3D model is shown in figure 8 and the critical point of the structure is indicated by an arrow.

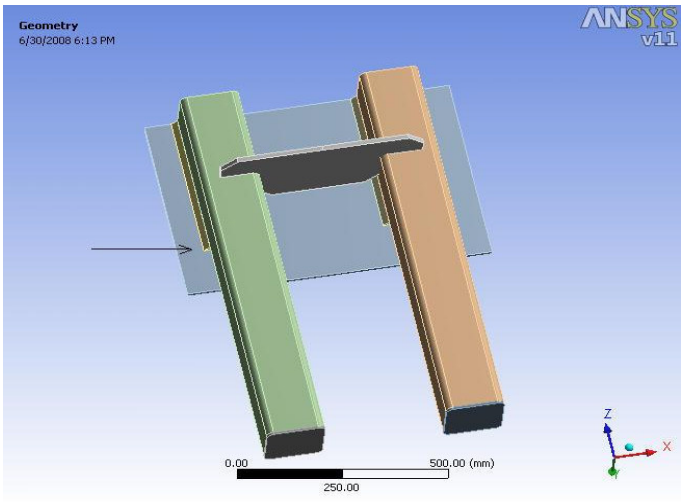

Figure 8. Simplified model of the structure

The critical weld is shown in the figure 8. The weld ends before the base plate. There should also be a plate for the crane bumper but it was not modeled because it is assumed to have a minor effect on the operating life time. For the FE analyses two five millimeters thick plates were modeled at the end of the legs in order to apply the loads. Without the plates the cross-section of the tube would have been distorted under the loads.

The shape of the weld and the location of the effective notch were carefully assessed. The required throat thickness of the weld requests more than one weld run. The problems lies in the geometry and the form of the tube corner because there will always remain a gap between the tube and the plate. The depth of the penetration was varied by changing the location of the notch. The depth of the weld was determined by sketching where the coated electrode in 60º angle touches the tube and the plate as it does in real life. The shape of the weld was modeled with 6 mm throat thickness.

4.3 FE analysis for the structure

The effective notch method requires a fine mesh to achieve reliable results. Because the guide roller structure was quite large the advantage of sub modeling techniques was used to enable the use of the maximal amount of elements at the critical point.

The sub modeling is a two step procedure. First the structure is modeled and solved as a whole model by using a coarse mesh. Then the sub model of the critical point will be created by cutting a smaller part from the whole model. The displacements from the whole model are transferred to the sub model by using macro files. The sub model can be meshed using the same amount of elements as in the complete model. Thus the results of the sub model can be very accurate. It is important to notice that displacement errors in the complete model will reflect on the results of the sub model. (Kinnunen 2008.)

4.3.1 The complete FE model

The guide roller structure is made of structural steel which yield strength is 355 MPa, Young's Modulus 210 000 MPa and Poisson's ratio 0,3. The FE analyses were made by using solid elements and the mesh was created by using automatic functions. The whole structure is presented in figure 9 as a deformed shape. The force is acting on x-axis, the leg parallel to y-axis and the height of the structure is on z-axis. The load is carried by only one leg at a time.

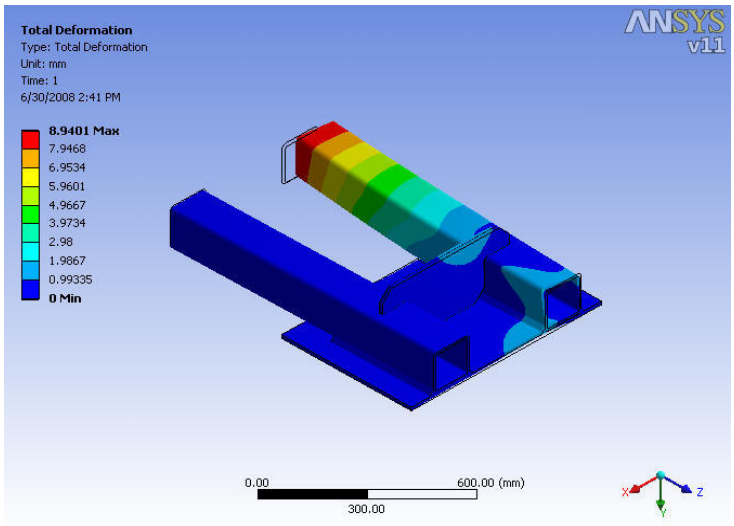

Figure 9. Deformed structure (scale 16)

The boundary conditions were set for the base plate where the guide roller structure is bolted to the end truck. The translations on y- and z-directions were set as 0 from the sides of the base plate. The x-directions were blocked from the corners below the base plate. The purpose was to imitate the real life bolt connection to the end truck. This means that the

base plate can bend and twist from the center and allows small transformations. The totally rigid support for the base plate could have caused too high stresses and the results could have been misleading. Overall different kinds of supports were tested to find out how the structure behaves before the sub modeling was started.

The force which causes the 9 mm displacement for the guide roller, was determinate by testing. The 9 mm distance or clearance was measured from the guide roller drawings. Using the FE analysis the magnitude of the displacement depends on the amount of the used elements. If the amount of elements is too low the displacement value can be too small and if the amount is too large, the calculation time can be too long. The optimal amount of elements was specified by using convergence of the displacement results. This was simply made by adding more elements until the value of the displacement became constant. This was made to ensure that the element amount in the model was enough. The convergence is presented in graph 1. With 69878 elements the value of displacement is almost constant.

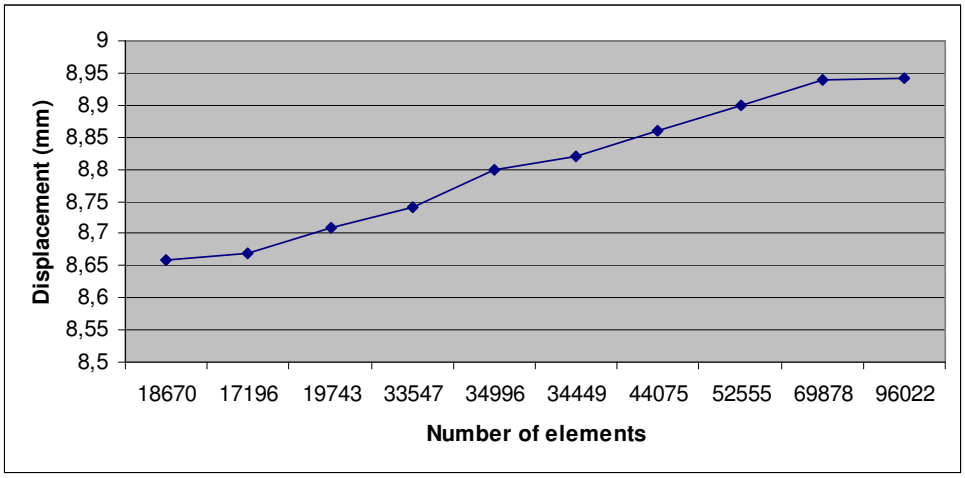

Graph 1. The convergence of displacement value

The amount of 69878 elements corresponds to the element length of 10 mm. It can therefore be presumed that 10 mm long element is enough for the complete model.

4.3.2 Sub model of the structure

After solving the complete model the geometry of the model was duplicated and transferred to WorkBench Modeler. The sub model was cut by using the Workbench Modeler. The sub model includes only the critical ending point of the weld. The displacement results of the complete model were transferred to the sub model's cutting surfaces with a macro file. Then the fine element mesh was created. The cut sub model is presented in figure 10.

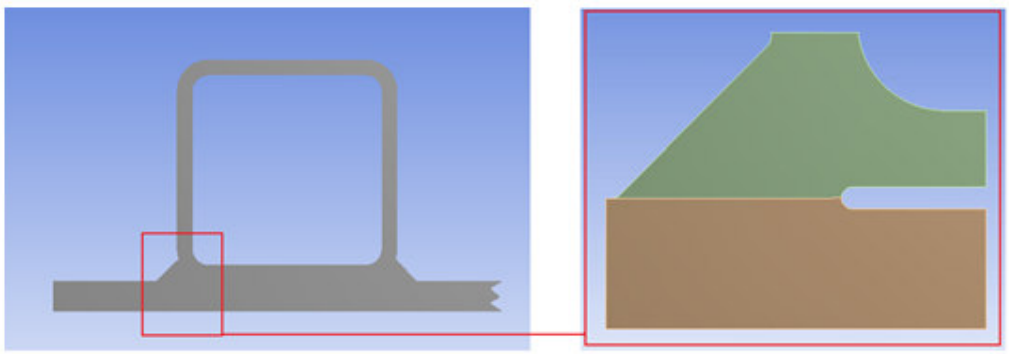

Figure 10. Sub model cutting

The fine mesh was made according to IIW regulations. Therefore, the element size around the effective notch is 0.2 x 0.2 mm, meaning that there are 20 elements on the arc of the notch. The element length is 0,15 mm at the weld toe. The element mesh is shown in the figure 11. (IIW document XIII-1965-03 2005, p. 35.)

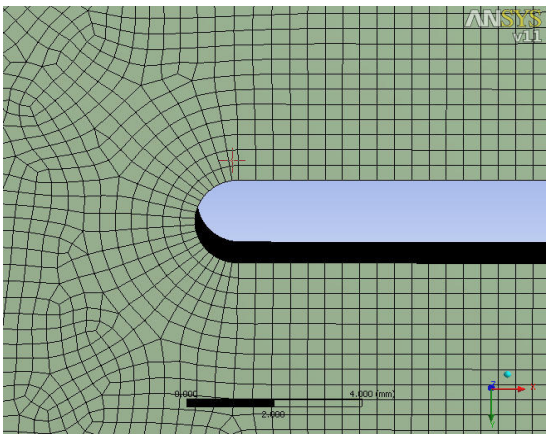

Figure 11. Element mesh around the notch

The sub models were made for two different notch location cases. The proper behavior and the functioning of the sub models were tested by solving the supporting forces, which must be zeros. This was done to make sure that the macro files and the models are working like they should.

The first sub model was with the calculated notch case. The second sub model was only for verifying that the stress results were close enough to each other. The extra sub model had a notch located about 10 mm from the calculated one. The calculated notch case is shown in figure 12. The sub model for stress checking is shown in figure 13.

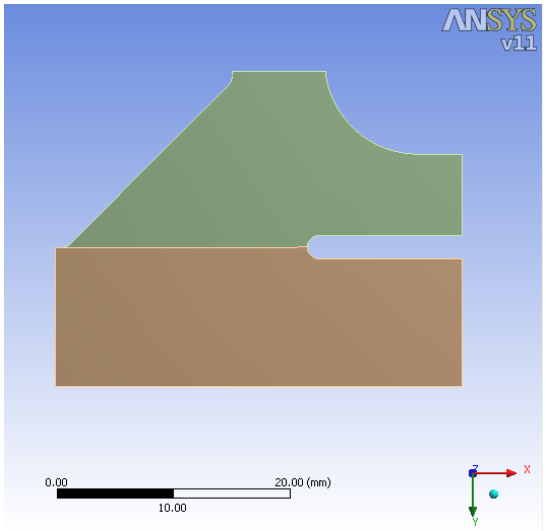

Figure 12. The sub model

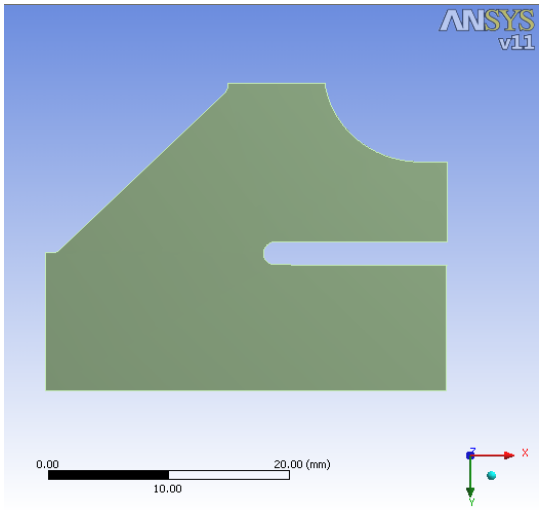

Figure 13. Sub model for result checking

The calculated notch location sub model was split in half for result reading purposes. The split sub model is presented in figure 12. The aim of the splitting was to get a line to the bottom of the notch for a result path. The first principal stresses were plotted in graphical form from the line. The first principal stresses at the bottom of the notch are shown in figure 14.

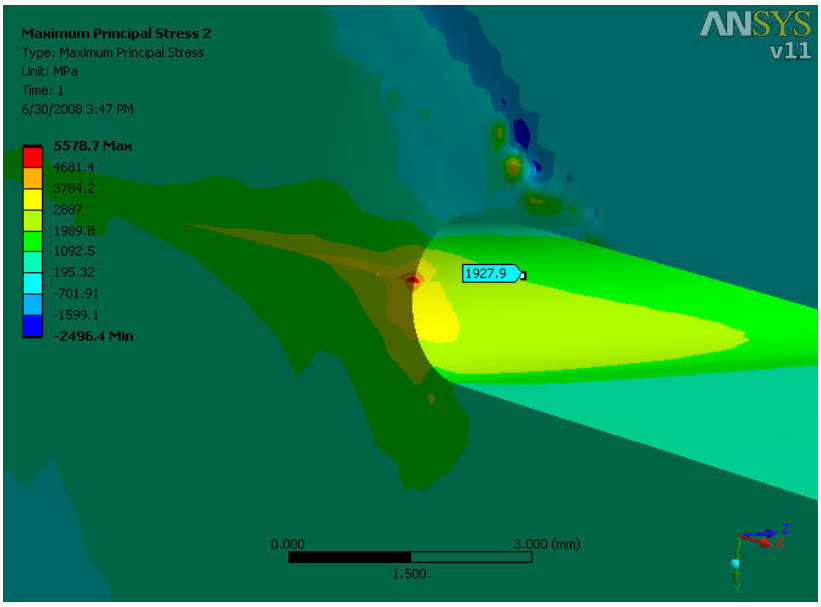

Figure 14. Result plot of the notch

4.3.3 Result from the FE analyses

The final result reading was made by using the sub model which notch location was determined by calculations. The second sub model was only for checking purposes. Furthermore, by using two models the number of repeats disclosed analysis errors.

The singular stress values are worthless, because they are caused by modeling techniques. For example the end point of the weld was not rounded. A sharp corner gives stress peaks which can not be used. Moreover, the amount of used elements is raising the value of singularity and the singularity goes for infinity. The number of used elements is almost constant in these two models, but the geometry varies a little. It is obvious too that it is impossible to get two exactly the same mesh for two different models. In this case, when using sub modeling techniques, the interpolation of the boundary conditions can cause

locally some small errors. According to the interpolation errors the results can not be read from the cut edges of the sub model.

For the result reading a special result path was created. This means that the sub model had to be separated into two different parts which are connected by the linear contacts. This can create small errors in the results and therefore the parts were connected to each other from the nodes. Then the mesh is perfect between these two solids. This is why the extra sub model for the result checking was made. Comparing these two models by using the probe-tool ensured that the results were right. The final result graph from the path is shown in figure 15.

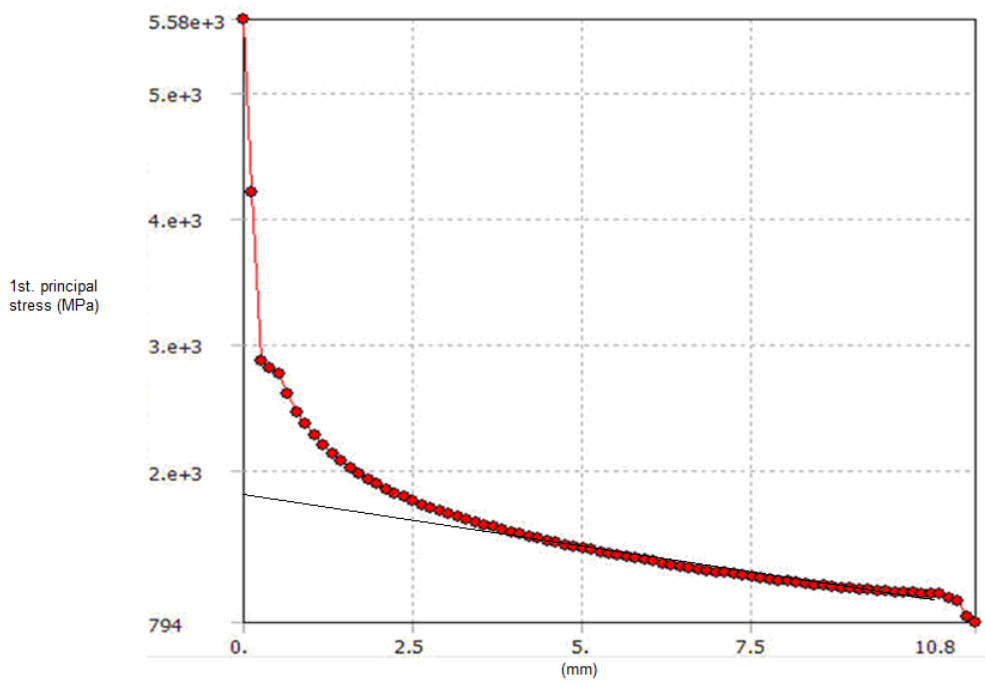

Figure 15. The 1st principle stress results

The stress singularity causes a peak in the results. Because of that the singularity was filtered away by averaging the graph. The line for averaging is also shown in picture 15. The principal stress value is therefore 1800 MPa. However, it is important to notice that the effective notch stress is a fictional value which is fitted to the S-N curve results. So notch stress can not be seeing as a real stress but as a singular stress caused by the radius of the effective notch. But in this certain case one must remember that the singularity caused by modeling shapes cannot be considered as a result.

4.4 Determination of the load spectrum

The crane's normal operating time was estimated to be 24 hours. The crane uses 12 hours for unloading the log trucks and another 12 hours for feeding the debarking process. While unloading the trucks the crane is not traveling much. The second half when unloading the log from the piles to feed the debarking process, the movement on the rails is more continuous. While doing that the crane accelerates, slows down and moves back and forth on the rails and the guide rollers are stressed considerably. The crane can handle 400 tons of logs per hour and the grapple can lift 27 tons at a time. Therefore the crane will do 178 work cycles in 12 hours. These values are based on a normal sized crane's average performance. Calculations are shown in appendix II.

The load cases for the load spectrum are forces from the rail bent, forces from the three feet skew and the forces from the 1 ft skew. The predication was that the lowest number of the load cycles comes from the rail bent. The 3 ft skew might occur only in some situations so it will be the second smallest load cycle case. The 1 ft skew will occur every time the crane moves so that will create the largest number of load cycles.

The loads for the spectrum are determined by using FE analyses. The skew forces were calculated earlier from the crane's whole FE model. Only the force from the rail bent was set in this thesis. The number of cycles to failure from the rail bent was calculated by using FAT 270 because of the use of the effective notch method. Furthermore the skew forces were related to rail bent force to get the number of cycles to failure caused by the skew forces.

The load spectrum was determined by using the Palmgren-Miner rule in a way that the miner's summation will give 1-2 years operating life time for the weld. The 1-2 years operating life time corresponds to the time when the studied point has failed according to the field experiences. The determined load spectrum and the percentages of the load cases are presented in table 1. The calculations for the operating life time can be found in appendix II.

Table 1. The load spectrum

Load case	Load (N)	Yearly percentage (%)	Load cycles per year
The rail bent (9 mm displacement)	99 000	2	1282
3 ft skew	82029	5	3204
1 ft skew (normal)	27343	93	59590

It must be taken into consideration that the determined load spectrum is not unambiguous. Applied forces to the guide rollers are depending on the condition of the rails, the use of the trolley and the crane's utilization rate. This load spectrum will be used in the new guide roller design.

4.5 Conclusions

FE analyses proved that stress levels are too high and the fatigue will occure before the expected operating life time is reached. Moreover the shape of the tubular hollow section is unsuitable for the fillet weld. The welded joint will be vulnerable for imperfections because of the bad weld ability of the leg's cross-section. Based on earlier experiences the fillet weld has failed in one or two years' operation. It is also known that the crack growth starts from the weld root. While the calculations and the experiences matched each other well there was no need for further analyses.

It is noticeable that the force, 99 000 N used in the analyses, will cause small twisting in the base plate and will have an effect on the biggest displacement result. The weld is also located far away from the leg's neutral axis so the leg will also be exposed to additional stresses caused by the torsion. The calculations in appendix I show that the lower yield strength will be exceeded. The calculated bending stress value is 390 MPa, but it is lower than the upper yield strength. In appendix I it is also calculated that the load from the rail bent will not exceed the static load capacity of the weld.

The analyses and the calculations proved that it is not reasonable to improve the present guide roller structure. It is more advantageous to make a whole new design from the

aspects of the fatigue design. When designing the new structure it will be relevant to concentrate on the ways how the fatigue resistance can be improved. The desired operating life time has to be reached by using the loads from the determined load spectrum.

5 DEVELOPMENT OF THE NEW GUIDE ROLLER STRUCTURE

5.1 Target and work procedure

The purpose of this work is to develop a new guide roller structure for the log yard crane by using systematic machine designing methods. The new structure will be developed from the aspects of the fatigue design so that the structure will achieve the required 10 years' operating life time. The fatigue resistance will not be improved by adding more steel but designing a good structure. In addition, more attention will be paid on manufacturing aspects to minimize manufacturing defects.

The designing work will be started by collecting wishes and demands for the new guide roller structure to set design criteria. New ideas, components and their functionality will be carefully considered already in the sketching phase to reduce the work with the poor ideas and to find good sub solutions. The best options for the new guide roller structure will be chosen from the sketches for the final development work.

The final structure development will be started by making the sub solution analyses to ensure that every part works as an individual unit. When all the parts have been carefully designed, the parts will be added together to form a complete assembly. The assembly will be analyzed by FEM calculations to ensure the required operating life time will be achieved. The complete manufacturing drawings are also part of the work.

5.2 Brainstorming

The work was started by defining the list of the demands and wishes for the new guide roller structure. The design criteria and the main functions of the structure were set by using a list. The list is shown in table 3.

Table 3. Demand and wish list

	FUNCTION
D	App. 10 years operating life time
D	To reduce the flange contacts between the gantry wheel and the rail
D	To reduce the wearing of the gantry wheels
D	The right flexibility properties of the leg
D	The easy mounting of the buffer
D	The easy mounting of the sweeper plate
	GEOMETRIC PROPERTIES
D	As few welds as possible at the highest stress range areas
D	Rational external dimensions
D	To minimize the catching possibility of obstacles
D	Possibility to observe the wearing
W	Easy changeability and adjustability of the rollers
W	Easy manufacturing
	SAFETY
D	Safe adjustability and erection
W	Lifting hooks
	D = Demand
	W = Wish

The main function of the structure is the same as it was with the old design; to reduce the contact between the rail and the flange of the gantry wheel when different force components are acting on the gantries. The purpose of the structure can be simplified to be the following: “The purpose of the guide roller system is to reduce the flange contact with the rail”. This is the cornerstone for the project.

The structure has only one main function and all the secondary functions are derivate from the main function. Also a function diagram was made for the guide roller system which is shown in figure 16. The actual main function of the system is to reduce the contact between the rail and the flange of the gantry wheel but also some secondary functions have been determined. As a secondary function, the guide roller structure must work as a mounting for the sweeper plate which will keep the rail clean from branches, rocks and other obstacles. One secondary function will be the required adjustment system for the guide rollers. The easy adjustment system is one of the key factors to get the structure work properly. The easy adjustment system will ensure that the guide rollers are adjusted right to reduce bearing and the structure failures.

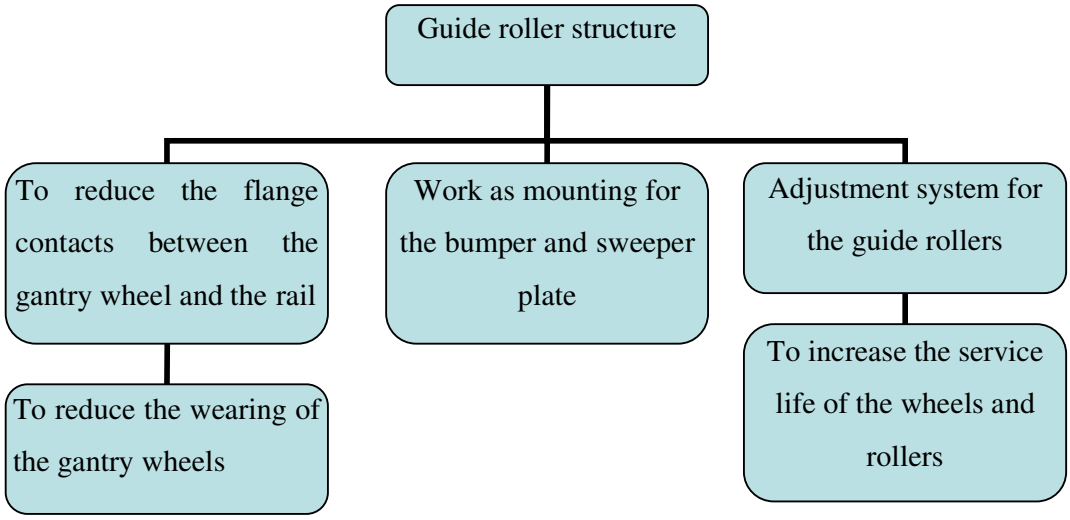

Figure 16. Function diagram

5.2.1 Sketching of solution alternatives and comparison

Five different ideas were found and many solution variations from each of these ideas were identified. All these ideas were made based on the list of wishes and requirements. The different kind of ideas were sketched at first and developed step by step. This means that after couple of sketches pros and cons were discussed and only the good ones were developed to the next phase. When all the ideas were checked, the best one was chosen for the final development work. All the sketches are presented in appendix III.

The first solution was a structure with a horseshoe shaped steel plate frame. The U-shaped frame would have been attached straight to the end truck mounting plate. The purpose of this frame was that it would be flexible enough without any welds. Nevertheless the proper plate behavior would have been difficult to achieve. For example the torsional rigidity might cause problems because of the small plate thickness. Overall three variations were made of this solution.

In the first variation the plate frame would have been attached straight to the mounting plate of the end truck. The use of the adjustment of the guide roller was a simple wappler shaft with a cone in its end. The purpose was that the adjustment would be done by turning the eccentric axle and locked by the cone. However, it is possible that the cone joint would be difficult to dismantle and the adjustment will be difficult.

The second variation of the U-shaped plate was the plate as in the first idea but turned horizontally. In this variation, the distance between the end truck and the guide roller would have been increased. Therefore the forces acting on the guide rollers would have increased also. The adjustment would have been done by bolting the guide roller assembly using the long holes which enables the portable adjustment. However, the use of long hole adjustment is not an easy way to get an exact clearance between the rail and the flange.

The third variation of the plate frame structure is the use two U-shaped plate frames connected by two tubes. The purpose was to improve the torsional rigidity but still the behavior of the plates and the adjustment implementation were too complicated to fulfill. These matters were the reason for the dismissal of the ideas. All the plate frame ideas are presented in appendix III on page 1.

The second comprehensive idea was the guide roller system, where the flexibility was created by disc springs. In the first disc spring solution the whole bearing assembly is attached to one linear guide and the disc springs allow required flexibility. In this solution the adjustment of the guide rollers must be done by adjusting the springs and the guide roller assembly separately. In the second solution, the disc springs and the guide roller assembly can be adjusted as one package so that the right offset can be accomplished easily. In this particular solution the pretension can also be adjusted without moving the

guide roller assembly. These two disc spring ideas are very much alike but only the adjustment of the guide roller assembly varies.

Disadvantages of the disc spring ideas were that the linear guides require considerably large structure which is very vulnerable to collisions with obstacles on the rails. The structure also includes a great deal of welds and many parts which require service. It is also noteworthy that the disc springs need lubrication to work properly. The whole structure with all the parts is very vulnerable to rust and therefore likely to jam. The whole idea was disqualified by its unsuitability for log yard conditions. The disc spring ideas are presented on the page 2 in appendix III.

The third independent idea was a structure where the leg (steel tube) is pin-connected to the structure's base plate. The purpose was that the leg bends between two pins and the adjustment system is located at the end of the leg. In the first solution the adjustment system was made by T-track guide and a screw adjustment. In the second option the T-track plate was replaced by a bended plate with two guides and an adjustment screw. These ideas were also disqualified based on the unreliable construction against forces acting on the guide rollers. These ideas are presented on page 3 in appendix III.

The pin ideas were developed further because of the advantage of non-welded structure. However, the adjustment was still the biggest problem. Therefore, the fourth idea where the location of the lower pin is adjustable was studied. The idea was that the lower pin will move along the curved track on the base plate. The leg rotates around the upper pin and the lower pin is the one with adjustment and locking. The idea was that the lower pin will be locked by the screw as a friction joint. However, the reliability of the joint is depending on the person who will make the tightening work. The problem is also that when the joint is opened the exact clearance between the rail and the flange is hard to define because the leg can swing freely after untightening. This idea was the first option for the final solution. The idea is presented on page 4 in appendix III.

The fifth idea was the same as the fourth but now the upper pins are adjustable. The purpose was to make the adjustment by shroud screws. It was a simple way but the problem was that the legs were supported from the lower pins on one side only. Obstacles

on the rails can bend the lower pins leading to the breakage of the whole pin structure. One of the biggest problems might also be very high pin surface pressure. The advantages of the structure are simplicity, opportunity to use purchased parts and minimum amount of welds. However, there are many problems to be solved before the structure is ready. This idea was also chosen to be an alternative for the final solution because the problems are very much the same as in the previous ones. The shroud screw ideas are presented on page 5 in appendix III.

5.2.2 Selection of the final solution

The pin idea with shroud screw adjustment system was chosen for the final development work. In this particular structure both legs can be adjusted separately as required. The structure was chosen also based on the wide range of opportunities and the simplicity of the structure. The structural problem solving was left for the final development work. The main problems of the chosen structure were high pin forces, size of the shroud screws and the support of the legs against possible obstacles on the rails. Naturally the resistance against the fatigue in order to meet the required operating life time with the determined load spectrum. The design of the guide rollers and their bearings will also be one major challenge of the development work.

6 THE NEW GUIDE ROLLER DESIGN

6.1 Engineering of the sub structures

The development work of the new guide roller design was accomplished gradually solving the problems one by one. The purpose was to design the sub structures individually starting from the worst case. Designing the most critical sub structure first, the second ones could have been designed based on the previous ones. This ensures that the sub structures will work together in the final structure. This spares engineering time and compromises can be avoided.

The sub structures and assemblies of the new structure are the legs, the leg adjustment system, pins and bushings, the guide roller assemblies and the sweeper plate. All the parts

will be attached together to fulfill the requirements defined in the list of wishes and requirements.

6.1.1 Selection of the leg tube

The main idea of the structure is that the legs will be flexible, but the legs are not welded on the base plate as it was done in the old structure. The legs were seen as the most critical components of the structure, because they affect the pin forces, the sizes of the shroud screws and of course the mounting solution for the guide roller assemblies. It was obvious that the leg profile must be a standard steel tube profile. The leg profile determination was started by defining the loads.

The chosen load cases included the loads from the 1 and the 2 ft skews. The plan was that the forces from the 2 ft skew will cause smaller than 9 mm displacement on the guide rollers. The assumed load spectrum consisted of the load from the 1 feet skew and the 2 ft skew only. The greater loads, the 3 ft skew and the forces from the rail bent are allowed to move the guide rollers away so the flanges of the gantry wheel can contact the rail.

After defining the loads, the determining the steel profile which will fulfill the displacement requirements was started by elementary calculations. The challenge was to find a distance between the pins so that the bending stresses could not exceed the yielding strength. At the same time the required displacement had to be fulfilled. If the distance between the pins is too great, the displacement value will not actualize and on the other hand the bending stresses stay lower. After many iteration rounds the proper profile was found with proper stress and displacement values. The chosen profile was 200 x 100 x 8 mm rectangular steel tube. The profile works when the force is acting in the direction of the profiles' smaller bending resistance. The local buckling of the steel tube was not calculated because all the standard profiles can reach at least the yield strength before the local buckling happens.

By using the profile this way the lower pin goes straight through the leg profile and the pin will be supported at its both ends. Therefore the supporting force couple distance will be at least 300 mm. At this stage a conclusion was made that the lower pin can also be a

machined axle with shoulders for the axial forces. The axle will be welded to the leg and the welds are located to the center line of the profile where the stresses are the smallest. The calculations are in appendix IV.

6.1.2 Engineering of the pins and the adjustment system

The adjustment system for the guide rollers was planned to be carried out by using the shroud screws. However, shroud screws are very long for this application. It was obvious too that an adjustment system of any kind cannot be fitted between the legs because of the limited space. Therefore the system will be located on top of the legs. At this stage the pin forces were determined for the selection of the components.

The shroud screws were found unsuitable for this case because of the length of the shrouds. The system with two male rod ends, a coupling nut and a locknut were found to be more suitable. The rod ends have different handed threads so turning the coupling nut makes the rod ends alienate or come closer. The locknut will ensure that the coupling nut will not start spinning by itself. The rod ends were chosen based on the upper pin forces. The disadvantage of the rod ends is the high price which must be compensated somehow.

The next phase was to calculate the surface pressure on the pins. The rod end will have only a pin diameter of 25 mm. The diameters of the holes were also 25 mm so only the thickness of the lugs was calculated. The plate thickness of 25 mm was found acceptable and then the lugs can be made from the same plate material as the base plate. Also the surface pressures were calculated on the lower pins. The purpose was to use bronze bushings to ensure that the pins won't rust. All the surface pressures were calculated by using the 3 ft skewing force to ensure that the pins will not fail if the guide rollers are adjusted wrongly. It is also noteworthy that the final load cases and adjustment requirements will be verified by the FE analyses. The calculations have been presented in appendix IV.

6.1.3 Re-engineering of the guide roller assembly

The main problem of the old guide roller assembly was the bearing failures. One reason for the bearing failures was the cone shaped guide roller exposing the bearing to axial loads. For the new design the shape of the roller was designed to be cylindrical and the axle of the guide roller was turned to the angle. The angled cylindrical roller touches the rail on the whole contact surface without a slide or axial forces.

The new bearings were dimensioned based on the load spectrum. It was also found out that the old bearing would have been suitable. However the old bearings were very expensive and their availability was limited. It is more efficient to use cheaper and better available catalogue bearings to reduce the total costs of the guide roller assembly. The bearing calculations can be found in the appendix V.

The new guide roller assembly was improved also by reducing the possibility of rain water staying on top of the roller. This was carried out by designing the top of the roller to be inclined. The sealing rings were replaced by the grease traps.

One problem with the old guide roller assembly was the poor reparability. When the guide roller has been worn out, the whole assembly must be replaced by a new one. One possible solution is the use of a special wearing surface witch is attached to the roller. When the wearing surface has become its end it will simply be cut off and the new one attached. However this was left out of the scope of this thesis.

6.1.4 Uniting the sub structures and the assemblies

When the pre-calculations and the subassembly were done all the components of the structure were added together by using 3D modeling. It was easy to get the big picture of the structure and to check that all the parts have enough space and that they will fit together. The 3D model was not made to be precise and detailed because the purpose was to use the same model in FE analyses. Only the functional dimensions were accurate. Details like threads and bolts were not modeled in order to keep the model simplified. The 3D model is presented in figure 17.

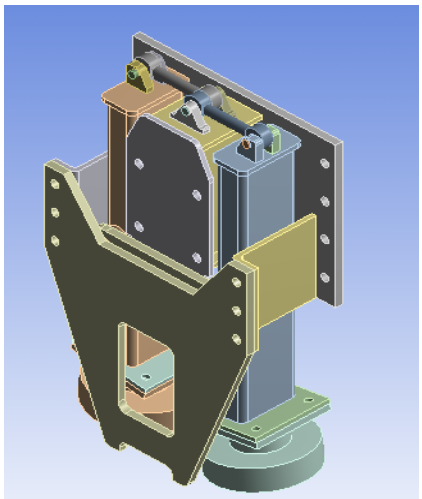

Figure 17. Completed guide roller assembly with all the parts together

The offset placement of the adjustment system with the shroud screws can be seen in figure 17. The offset of the adjustment system will cause twisting of the legs. This will be studied in the analyses phase. The sweeper plate is also added to the model. The mounting for the sweeper plate could not have been done from the plate which connects the lower pins. If the sweeper plate bends under overloading it would break the pins also destroying the whole structure. In this design the mounting plates for the sweeper plate are welded straight to the structure's base and the sweeper plate is bolted to the bended mounting plates, which can be repaired easily. A special hole was also added to the sweeper plate for gantry wheel checking. The shape of the sweeper plate allows bumper installation if needed. The structure without the sweeper plate can be seen in figure 18.

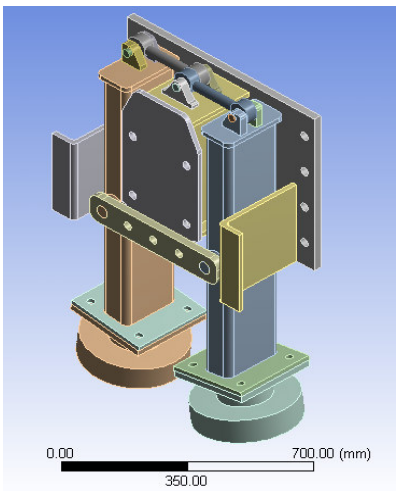

Figure 18. The new guide roller design without the sweeper plate

The plate which connects the lower pins is shown in figure 18. It is bolt connected to the base structure which is made out of five plates. The base structure must be extremely strong, because all the loads from the guide rollers and the sweeper plate are transferred via it to the end trucks. It acts also as a mounting for the bumper.

7 FATIGUE ANALYSIS OF THE NEW STRUCTURE

7.1 Determination of the critical welds

The studied point for operating life time calculations was determined to be the welds which connect the lower pin and the leg. The largest bending stresses are acting on the sides of the leg where the pin is located. The pin's center is on the neutral axis of the leg where stress ranges are the smallest. The diameter of the pin is 60 mm. The shoulders of the axle (pin) are working as sliding surfaces and carry the axial loads. The axial loads are acting on the crane's traveling direction. Therefore the pin has four sliding surfaces which must be taken into consideration in FE analyses. The pin was modeled to be a loose part and only the weld carries the loads. The effective throat thickness of the weld is 7 mm. Top view of the leg structure with the welded pin is presented in figure 19.

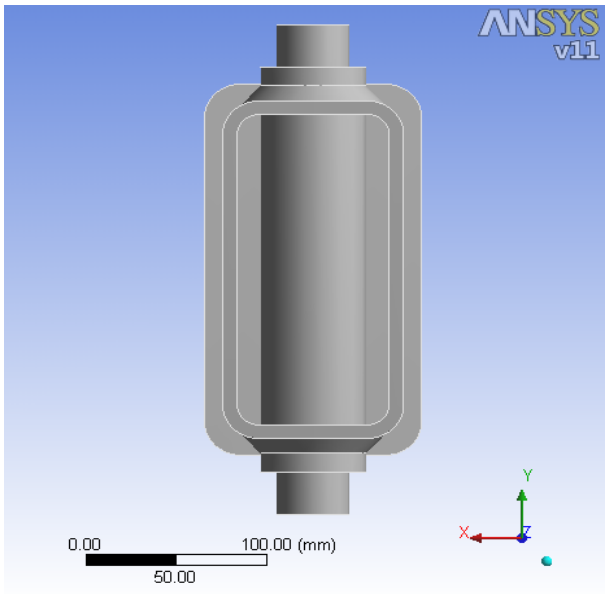

Figure 19. The weld joints of the pin and the leg

7.1.1 Hot spot – fatigue analysis

The weld connection between the leg and the pin was studied by using the hot spot – method. This particular method is suitable when a crack will form at the weld toe and when principal stress acts approximately perpendicularly to the weld toe. In the welded structures fatigue usually starts from the weld toe. The fatigue starting point is called the hot spot point where the hot spot stress is acting. The hot spot stress can be defined as a structural stress in the hot spot point. (Niemi & Marquis & Poutiainen 2005, p. 58–63; Niemi 2003, p. 99–100.)

The objective of the hot spot –method is to eliminate the non linear peak stress from the hot spot stress. The stress peak is caused by the notch. The elimination is done by extrapolating the results of the FE analysis using the equations (1). The first stress value is located 0.4t from the weld toe and the second one is located 1.0t from the weld toe. The t equals material thickness. The distance 0.4t is the point where the effect of the notch has disapperared. (Niemi 2003, p. 99-102; Niemi 1996, p. 25.)

$$\sigma_{hs} = 1.67\sigma_1 - 0.67\sigma_2 \qquad (1)$$

The use of the FE requires a knowledge and former experience to get reliable results. The use of shell or solid elements is acceptable with a dense element mesh. However the modeling by using shell elements is difficult. It is more advantageous to model details with solid elements when the bending stiffness will not become too high.
(Niemi 2003, p. 101–102.)

7.2 FE analyses of the new structure

The 3D model was simplified for the FE analyses purposes to increase the amount of elements. The guide rollers were removed and the legs were simplified. Also the mountings for the sweeper plate were removed. The purpose of FE analyses was to determinate the operating life time of the welded structure and to study the displacement of the guide rollers by using the loads from the load spectrum. The simplified geometry of the new design for the FE analyses is presented in the figure 20.

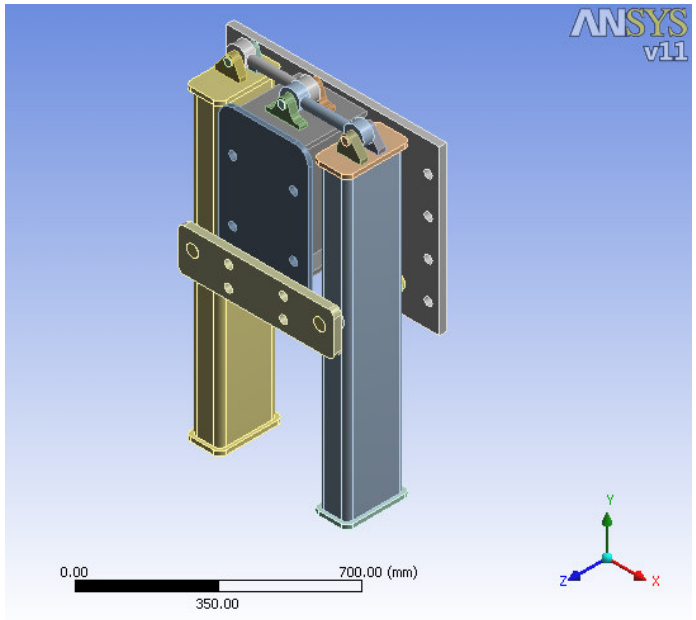

Figure 20. Simplified model for FE analyses

The used values for the Young's modulus was 210 000 MPa and for the Poisson's ratio 0.3. The FE analyses were done by using the advantage of the sub modeling techniques, which were explained in the old structure's analyses. The weld between the leg and the pin was studied by using the Hot spot –method, which is suitable when analyzing the weld toe. The proper element type for the hot spot -method is a 20-node solid element.

The FE analysis was started by choosing an applicable analysis type. Because of the sliding surfaces the analysis should be a non-linear one to get the contact surfaces on the pins to work properly. However, a linear type of the analysis was used when analyzing the frictionless contacts with the pins. The frictionless contact allows rotation of the contact surfaces but keeps them together and therefore the analysis can be linear. The frictionless contact will give right results for the weld toe, but the results on the pin's holes can include some errors. The result errors on the holes and the bushings do not matter, because the contact pressure can be calculated easily based on basic equations. The main thing is to get the results from the weld toe right.

The contact surfaces were set to the upper and the lower pins to ensure that the pins will not resist the leg's rotational movement. The boundary conditions were the same as they

were in the old structure. The base plate's y- and z-translations were blocked from the base plate's sides and the x-translation from the plate's lower corners. The size of the used elements was 10 mm, which is the same as with the old structure. The force is acting on the x-axis with the magnitude of 2 ft skew (54685 N). The structure and the used coordinate system are shown in figure 21.

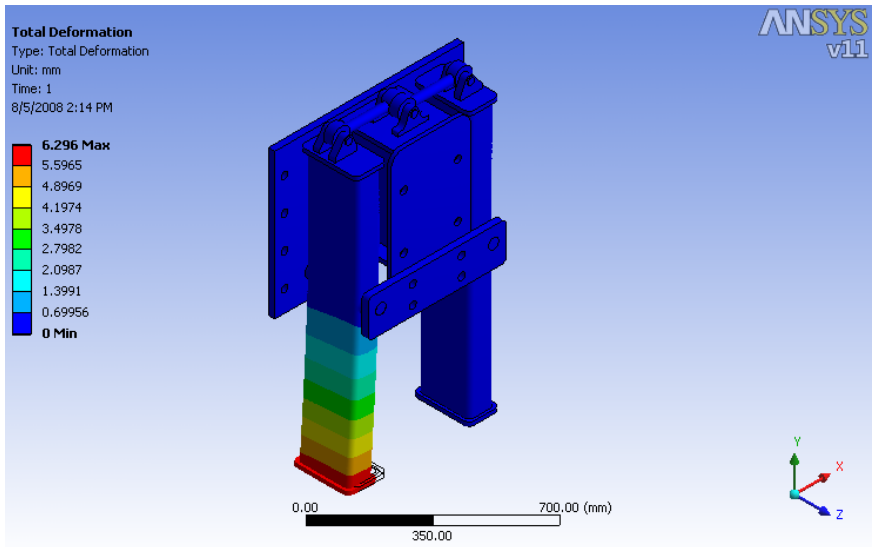

Figure 21. The deformation of the new guide roller structure (2 ft skew)

7.2.1 Sub model of the new structure and the results

The sub model was cut around the welds to get the part of the rectangular tube and both welds in the analysis. It is important to notice that the sub model cannot be cut from the contact surfaces, so the model was cut right after the shoulders of the pin. The element sizes were set to be as small as 0,2 mm around the welds. After solving the model, the result file was made by using the macro files. The result file includes only the data of the results and the shape of the element mesh. The purpose of this was to transfer all the result data to Classic Ansys for the result reading. The result reading processes are easier to do with Classic Ansys. The mesh of the sub model is presented in figure 22.

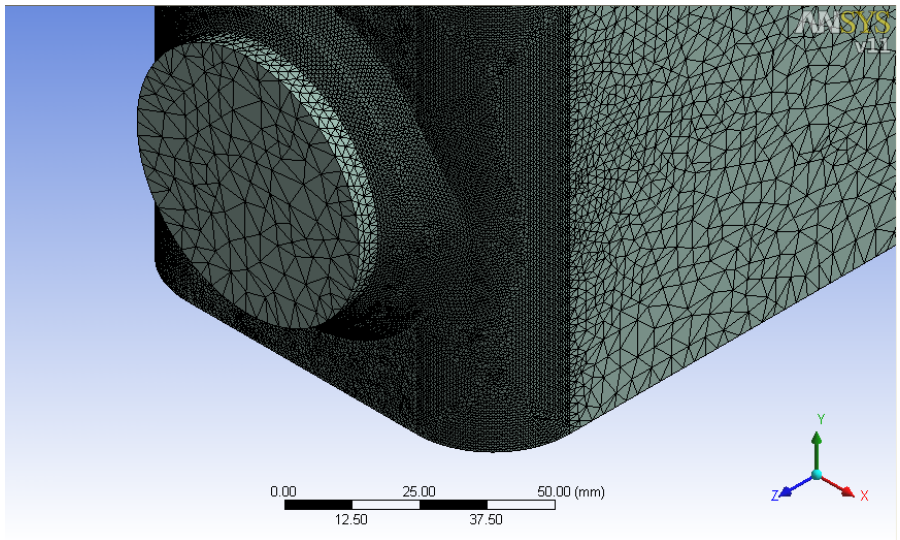

Figure 22. The element mesh of the sub model

The results were read by using path operations. Before creating the result paths the local coordinate system was changed to the local cylinder coordinate system. The purpose of this was to get stress results which are perpendicular to the weld toe. By changing the coordinate system the results could have been read in the radial direction. In figure 23 the sub model is presented in the path operations.

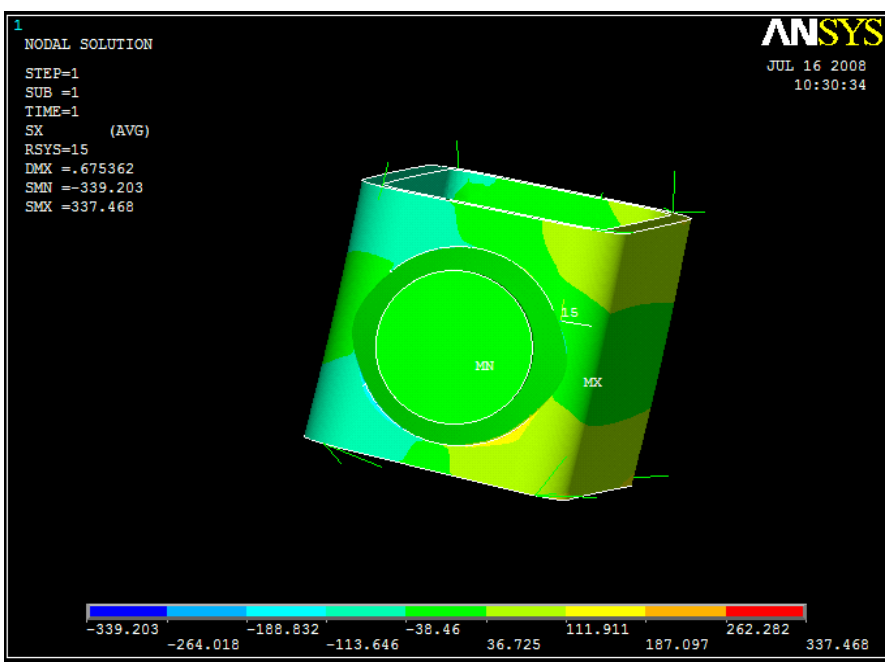

Figure 23. Result plot using Classic Ansys

The result path was created to the lower right corner. Also the left and the back sides were studied but in this case the right side was the critical one. The stresses are not the same at the back side, because the adjustment system is causing a little twisting to the leg. This is why all the cases were checked to ensure, which point is the critical one. The effect of the adjustment offset was minimal even using the load from the 3 ft skew.

A graph and a list of the results were plotted from the result path. The calculated extrapolation was made by using the result list and the graph was for the result checking. The graph indicates the stress peak at the weld toe. Using the graph it is also easier to be sure that the result path works properly and the size of the elements are small enough. The result calculations are presented in appendix VI.

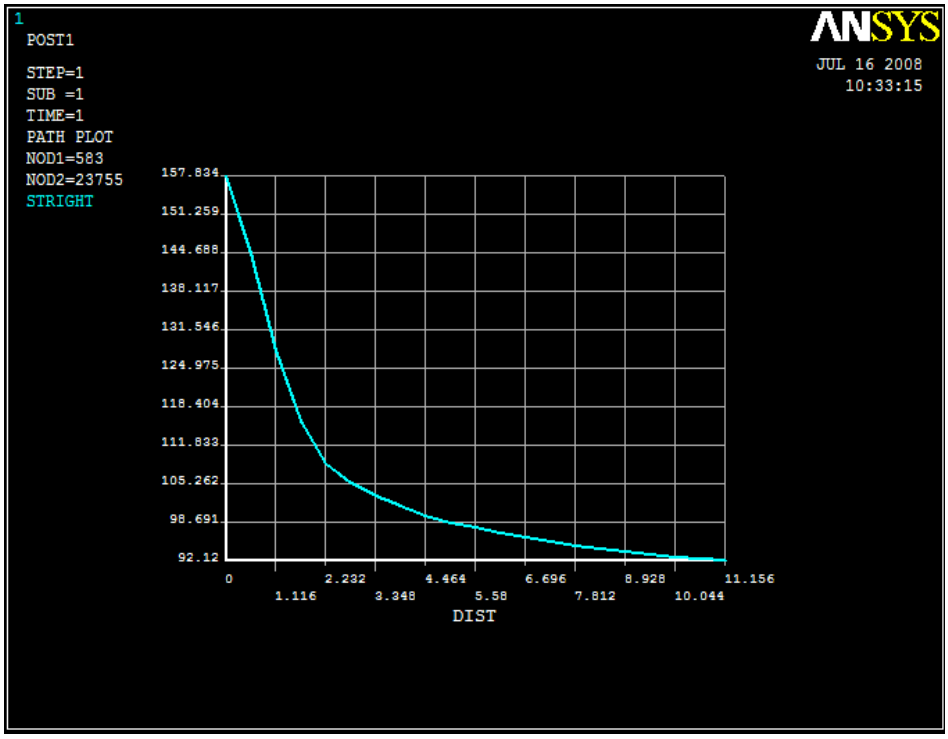

Figure 24. The hot spot -stress

7.2.2 Stress analysis for the sweeper plate

The mountings for the sweeper plate and the plate itself were studied by using FE analysis. The analysis was made for studying the stresses caused by the forces, which can occur if the outermost gantry wheel has become as a non load carrying one. The purpose of the plate is not to carry the loads of this high and it was studied only for safety matters. It is obvious that when the crane derails, the forces against the sweeper plate become extremely high breaking the plate.

For the sweeper plate analysis the guide roller systems were rigidly supported from the base plate. The boundary conditions were a compromise to get the base plate's behavior right. The load acting on the surface of the rail notch was 311 KN. When checking the stresses on the sweeper plate's mountings, also the structure around the observation hole of the gantry wheel was studied. The resistance against possible obstacles on the rails wasn't analyzed because the determination of the load is impossible. The improvement of the bending resistance against the obstacles could have been done by forming the shape of the plate, but it was left out from the scope of this study. The stress ranges are shown in figure 25.

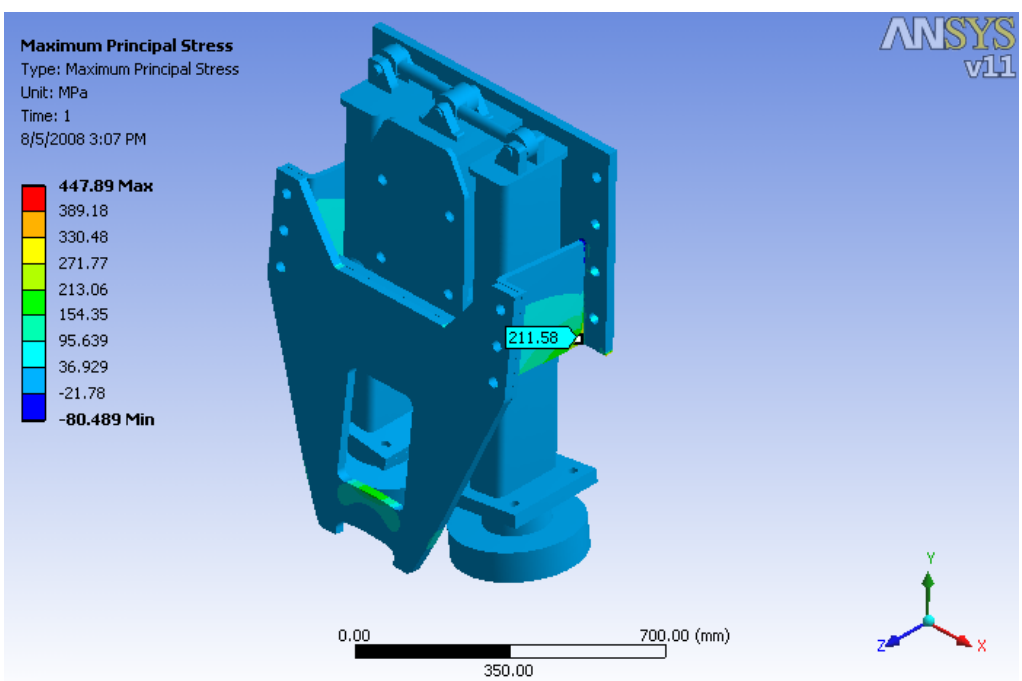

Figure 25. The mountings of the sweeper plate

7.3 The final structural results

The new guide roller structure was studied by using basic equations when designing the different parts of the structure. Knowledge of the interrelation of the stresses and the loads were utilized when calculating the stresses, displacements, surface pressures and so on. This was the easiest way to analyze the whole structure.

Shear and surface pressures of the upper pins were studied carefully because the diameter of the pin is limited to be only 25 mm. It was also decided at this stage that the use of the bronze bushings is unnecessary with the upper pins while the rod ends have an internal bearings. The surface pressure checking on the upper pins was made to ensure that the holes will not become loose or oval shaped, because of too high stresses. The upper pins are locked by the retaining rings. It is also possible, that the pins are welded to the lugs to reduce the surface stresses but it will complicate the service work.

The lower pins have the bronze bushings. Bushing manufacturers give recommendations on allowed surface pressures on the bushings, when the pin or axle is rotating in the bushing. In this particular case the pin will not spin. The purpose of the bronze bushing is only to ensure that the joint will work and will not rust. However the surface pressures were set low to reduce the wearing of the bushing. For the future service enough material was left around the bushing's holes if there is a need to renew the bushings with bigger ones.

After final calculations some improvements were made to the structure itself and to the manufacturing drawings. The plate which connects the lower pins was originally planned to have a bolt connection only. However it is possible that the tightening of the bolts is not properly done. The moving plate can ream the bushings. In order to prevent that happening, two lock pins were added to the pin connecting plate. The bolts can still carry the loads themselves. The lock pins and their holes are made after bolt tightening to get the holes right.

All the final structural results are collected to table 3. And all the allowed designing values are in table 4. The calculations can be found in appendix IV.

Table 3. Structural results

The load case	1 ft skew	2 ft skew	3 ft skew
Force (N)	27343	54686	82029
Displacement (mm)	3.1	6.3	9.4
The force of the lower pins (N)	60730	121450	182180
Surface pressure on the lower pins (MPa)	30	61	91
The force of the upper pins (N)	33380	66760	100100
Surface pressure on the upper pins (MPa)	26	53	79
The shear of the upper pins (MPa)	33	66	99
Leg's highest bending stress (MPa)	118	235	352
Hot spot (MPa)	54	109	163

Table 4. Allowed design values

The allowed static load of the rod end (N)	300000
The allowed surface pressure of the bronze bushing (MPa)	100
Yield strength of the S355 (MPa)	355

7.4 Determination of the operating life time of the new structure

The operating life time calculations for the new structure are based on the load spectrum of the old guide roller structure. The operating life times were calculated for the leg profile, the bearings and the welds, which are located at the lower pins. The life expectancy for the different parts was calculated for two different cases. The first case is where the load portion consists of 7 % of 3 ft skew forces and 93 % of 1 ft skew forces. The force from the 3 ft skew causes 9 mm displacement on the guide roller.

The second load case consists of 7 % of 2 ft skew forces and 93 % of 1 ft forces. The force from the 2 ft skew causes 6 mm displacement which is the designed value for the adjustment. However the case, where the 3 ft loading is the highest was calculated to ensure that the structure will not fail, if the guide rollers are adjusted in the wrongly manner.

The welds at the lower pins were studied by using the hot spot –method. The used fatigue class was FAT 100. The operating life time of the bearings was calculated with an assumption that the bearings carry only radial forces. The shape of the guide rollers was changed and the axle of the guide rollers was turned to the same angle as with the rail's inclined side contact surface. The operating life time was calculated for the new and the old bearings. Calculations for the welds can be found in appendix VI and the calculations for the bearings in appendix V.

The legs of the structure are made of joint less rectangular tube, which has a high resistance against fatigue. However the operating life time was calculated to the leg profile, which has welded joints on the sides where the highest stress range areas are. It must be taken into consideration that if the used leg profile is welded and the welds are located on the same side as the pins, the joints are on the neutral axis of the bending. In that case the welds are on the lowest stress range area and the tube can be considered as a non welded structure. However it was calculated that the forces from the 2 ft skew will cause the fatigue of non welded profile. The bending stresses were determined by simple calculations and then compared to the results from the FE analyses. The operating life time

for welded profile was calculated based on the fatigue class FAT 125. Calculations for the leg are in appendix VI.

The results for both cases are presented in the table 5. In both cases, the portion of the loads from the 1 ft skew is 93 %.

Table 5. Operating life time results

Studied part of the new guide roller structure	Operating life time in years, when 7 % 3 ft skew and 93 % 1ft skew	Operating life time in years, when 7 % 2 ft skew and 93 % 1 ft skew
Studied weld joint	67	129
Steel tube (leg)	13	25
Bearing (TimKen)	45	102
Bearing (SKF)	67	149

The required operating life time of 10 years was accomplished. Certain safety factors weren't used because the structure was designed from two different view points: the operating life time for the case where the adjustment is done properly and the operating life where the guide rollers are set too close to the rail. The 6 mm clearance between the rail and the flange of the gantry wheel corresponds to the right adjustment and the 9 mm clearance the abuse case. The new design achieves the both cases.

8 THE FINAL CONCLUSIONS

The new structure fulfils the operational and geometrical requirements, which were defined in the beginning of the development work. The most essential features of the new structure were the reduction of the amount of welds in the area of the highest stress ranges and the easiness of the adjustment of the guide rollers. Also the bumper and the sweeper plate can easily be mounted to the structure. The structure was equipped with a lifting lug to help the assembly work and to make it safe.

The geometry of the guide rollers were changed from cone shape to a cylindrical one to prevent the bearing failures caused by axial loads and to reduce the wearing of the guide rollers. In addition the cost of the bearing assembly was reduced. The guide rollers can also be adjusted individually on the top of the structure without removing any parts, which makes the adjustment elements easy to access. The easiness of the adjustment service was also one of the key requirements in order to prevent the errors in the adjustment work and the negligence of the service. The right adjustment of the guide rollers enables the increase in operating life time

The required 10 years' operating life time of the welded structure and the bearings was met with the both development criteria. The main criterion was that the structure stands the loads coming from the biggest 2 ft skewing and the other criterion was that the structure can take the loads coming from the abuse of the adjustment of the guide rollers. In the abuse case the rollers have been adjusted too close to the rails and the leg has to bend 9 mm before the flange of the gantry wheel attaches the rail. This causes the highest loads to the guide roller structure.

The amount of welds was minimized in the area of the highest stress ranges. The new structure enables the post-treatment to the most critical welds to increase the resistance against the fatigue. In addition the structure was engineered to be service and manufacturing friendly. The shape of the structure was designed to be suitable for the conditions of the log yard. In the log yard there are a lot of different kind of materials on the rails like wood branches, stones, mud and even the fallen logs, which can hit or stuck to the end trucks and the guide roller structure. The collision to the logs will not lead to the entire breakage of the structure. For example the fixing elements of the sweeper plate were engineered in a way, that the possible overloading caused by the hits, will not necessarily cause total failure of the structure, but a local repairable damage. The old guide roller system can be replaced by the new one without any changes to the end trucks.

REFERENCES

Bathe, Klaus-Jürgen. 1996. Finite Element Procedures. New Jersey, Prentice Hall. 1037 p.

Dowling, Norman E. 2007. Mechanical Behaviour of Materials. Third edition. New Jersey, Prentice Hall. 912 p.

IIW Recommendations for Fatigue Design of Welded Joints and Components 2005. IIW document XIII-1965-03/XV-1127-03. 149 p.

Ikonen, K. & Kantola, K. 1986. Murtumismekaniikka. Helsinki, Otakustantamo. 382 p.

Lehtinen, I. 2005. Hitsatut profiilit, käsikirja 2005. 2nd. edition. Keuruu, Teräsrakenneyhdistys r.y. 288 p.

Niemi, E. & Kemppi, J. 1993. Hitsatun rakenteen suunnittelun perusteet. Helsinki, Painatuskeskus Oy. 336 p.

Niemi, E. & Marquis, G. & Poutiaine, I. 2005. Lecture material, Design of Plate Structures. Lappeenranta, Lappeenranta University of Technology. 332 p.

Niemi, E. 1996. MET Tekninen tiedotus: Hitsattujen rakenteiden väsymistarkastelussa käytettävät jännitykset. Helsinki, Metalliteollisuuden kustannus Oy. 45 p.

Niemi, E. 2003. Levyrakenteiden suunnittelu. Helsinki, Teknologiainfo Teknova Oy. 136 p.

SFS 4020. Nosturien ja nosturiratojen laskentaohjeet. Teräsrakenteet. Helsinki: Suomen stardisoimisliitto, 1982. 33 p.

INTERVIEWS:

Kinnunen, M. M.Sc. Entop Oy. Hollola. Summer 2008. Interviewer Ossi Viiala.

Lähteenmäki, J. M.Sc. Engineering Manager. Andritz Inc. Atlanta. Summer 2008. Interviewer Ossi Viiala.

APPENDIX I

CALCULATIONS FOR THE WELD AND FOR THE BENDING STRESS
OF THE OLD STRUCTURE

Bending stress at the end of the weld

$l := 633\,mm$ $F := 99000\ N$ $W := 161 \cdot 10^{3}\ mm^{3}$ S355

$M := l \cdot F$ $M = 6.267 \times 10^{7}$

$\sigma_b := \frac{M}{W}$ $\sigma_b = 389.236\ MPa$ Upper yield strength for S355 is 420 Mpa

Static design of the weld

For S355 $f_{vwd} := 251$ $l_1 := 382$mm (length of the weld)

$a := 10$ throat thickness

Profile
140 x 140 x 8

$F_2 := f_{vwd} \cdot l_1 \cdot a$ $F_2 = 9.588 \times 10^{5}$

Distance between bending force and rotation centre is 783 mm

Maximum bending force $V_b := \left(\frac{140}{783}\right) \cdot F_2$

$V_b = 1.714 \times 10^{5}$

$V_b > 99000\ N$ The weld can handle higher loads than the maximum load from the rail bent is

THE DETERMINATION OF THE OPERATING LIFE TIME OF THE STRUCTURE

Calculation for the load history

1. $w := 400$ tons per h Grapple carries $G := 27$ tons

$t := 12$

Opetation cycles per day $\left(\frac{w \cdot t}{G}\right) = 177.778$

1.assumptions

FAT 270

Assuption that load history consists of All units in millimeters, Newtons and MPa

5 % rail bent, load 99 000 N

10 % 3 ft skew, load 82029 N

85 % normal operations, load 27343 N (1ft skew)

Cycles for normal operations $178 \cdot 360 \cdot 0.85 = 5.447 \times 10^4$

Cycles for 3 ft skew $178 \cdot 360 \cdot 0.1 = 6.408 \times 10^3$

Cycles for rail bent $178 \cdot 360 \cdot 0.05 = 3.204 \times 10^3$

The Palmgren-Miner Rule:

$$\sum_i \frac{N_j}{N_f} = 1$$

N_j = work cycles

N_f = "cycles to failure"

results from FE-analyses for THE rail bent

$\sigma_n := 1800$ MPa

$$c := \frac{2000000}{\left(\frac{\sigma_n}{270}\right)^3} \qquad c = 6.75 \times 10^3 \text{ cycles}$$

For the rail bent

$$\frac{3204}{6.75 \times 10^3} = 0.475$$

The Palmgren-Miner rule for the 3 ft skew

$$\frac{82029}{99000} = 0.829 \qquad 0.829 \cdot 1800 = 1.492 \times 10^{3}$$

$$c_s := \frac{2000000}{\left(\frac{1492}{270}\right)^{3}} \qquad c_s = 1.185 \times 10^{4} \qquad \frac{6408}{1.185 \times 10^{4}} = 0.541$$

The Palmgren-Miner rule for the 1 ft skew

$$\frac{27342.9}{99000} = 0.276 \qquad 0.276 \cdot 1800 = 496.8$$

$$c_n := \frac{2000000}{\left(\frac{496.8}{270}\right)^{3}} \qquad c_n = 3.211 \times 10^{5}$$

$$\frac{5.447 \times 10^{4}}{3.211 \times 10^{5}} = 0.17$$

Palmgren -Miner sum

$$0.475 + 0.541 + 0.17 = 1.186$$

$$\frac{1}{1.186} = 0.843$$ years is too short

2. New assumptions

Assuption that load history consists of

2 % rail bent, load 99 000 N

5 % 3 ft skew, load 82029 N

93 % normal operations, load 27343 N

Cycles for normal operations $178 \cdot 360 \cdot 0.93 = 5.959 \times 10^4$

Cycles for 3 ft skew $178 \cdot 360 \cdot 0.05 = 3.204 \times 10^3$

Cycles for rail bent $178 \cdot 360 \cdot 0.02 = 1.282 \times 10^3$

Miner s theory and results from FE-analyses for rail bent

$\sigma_n := 1800$

$$c := \frac{2000000}{\left(\frac{\sigma_n}{270}\right)^3} \qquad c = 6.75 \times 10^3 \qquad \frac{1.282 \times 10^3}{6.75 \times 10^3} = 0.19$$

The Palmgren-Miner rule for the 3 ft skew

$$\frac{82029}{99000} = 0.829 \qquad 0.829 \cdot 1800 = 1.492 \times 10^3$$

$$c_s := \frac{2000000}{\left(\frac{1.492 \times 10^3}{270}\right)^3} \qquad c_s = 1.185 \times 10^4$$

$$\frac{3.204 \times 10^3}{1.185 \times 10^4} = 0.27$$

The Palmgren-Miner rule for the 1 ft skew

$$\frac{27342.9}{99000} = 0.276 \qquad 0.276 \cdot 1800 = 496.8$$

$$c_n := \frac{2000000}{\left(\frac{496.8}{270}\right)^3} \qquad c_n = 3.211 \times 10^5$$

$$\frac{5.959 \times 10^4}{3.211 \times 10^5} = 0.186$$

Palmgren -Miner sum

$$0.19 + 0.27 + 0.186 = 0.646$$

$$\frac{1}{0.646} = 1.548$$ 1.5 years is enough

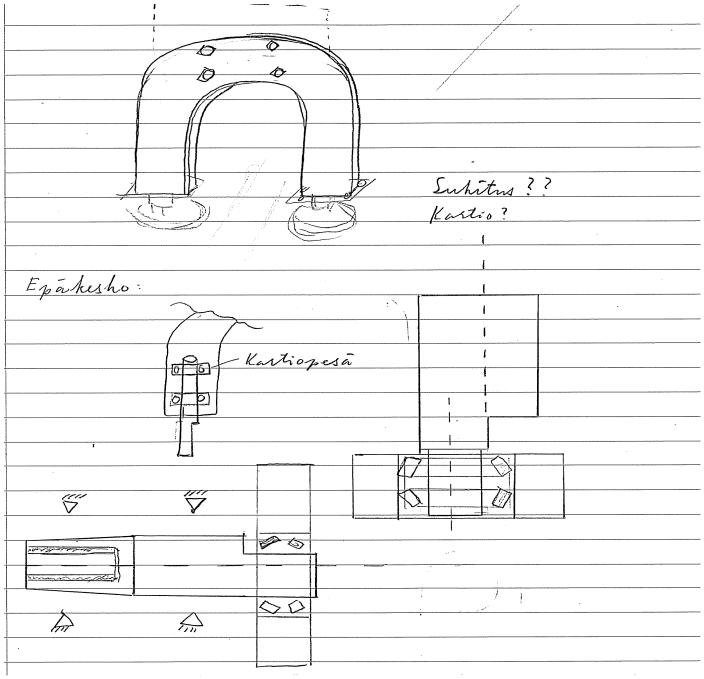

Figure 1a. The first idea of the U-shaped steel plate frame

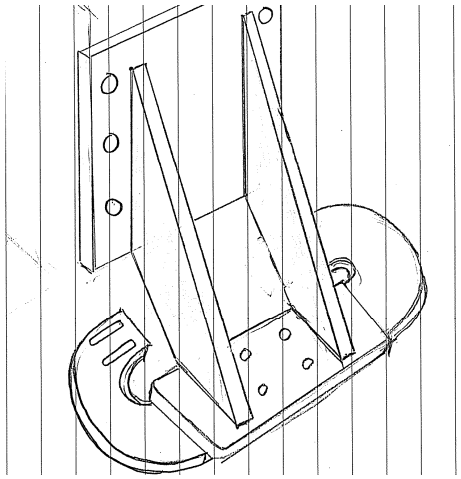

Figure 1b. The second frame solution

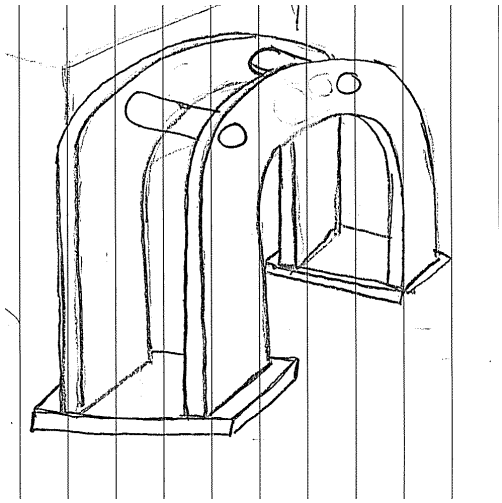

Figure 1c. The third frame solution

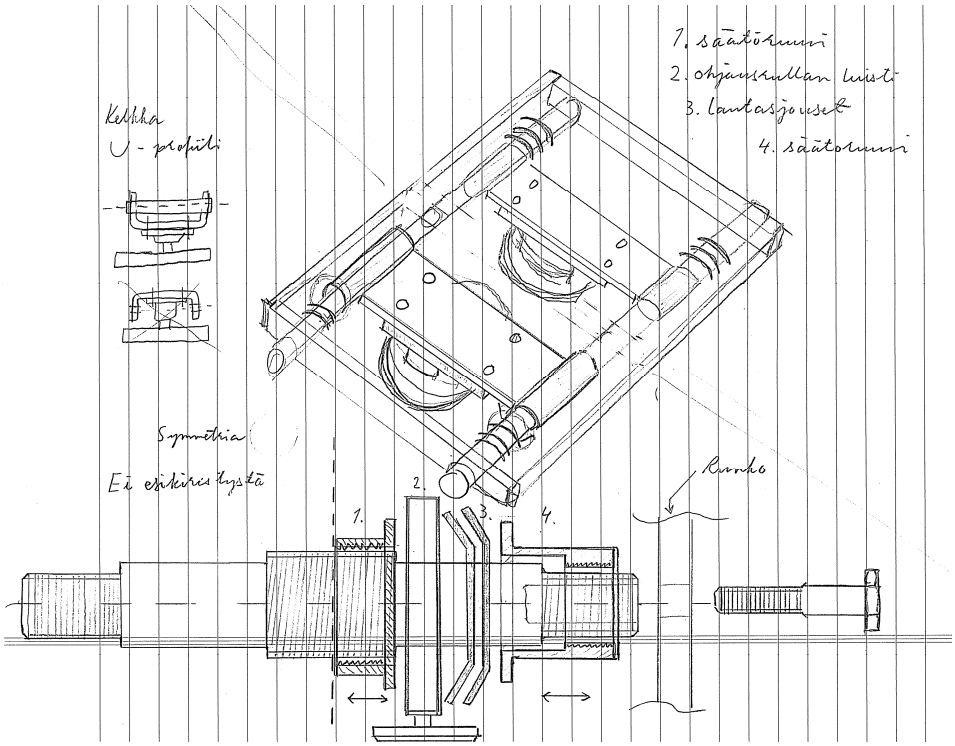

Figure 2a. The first sketch of the disc spring idea

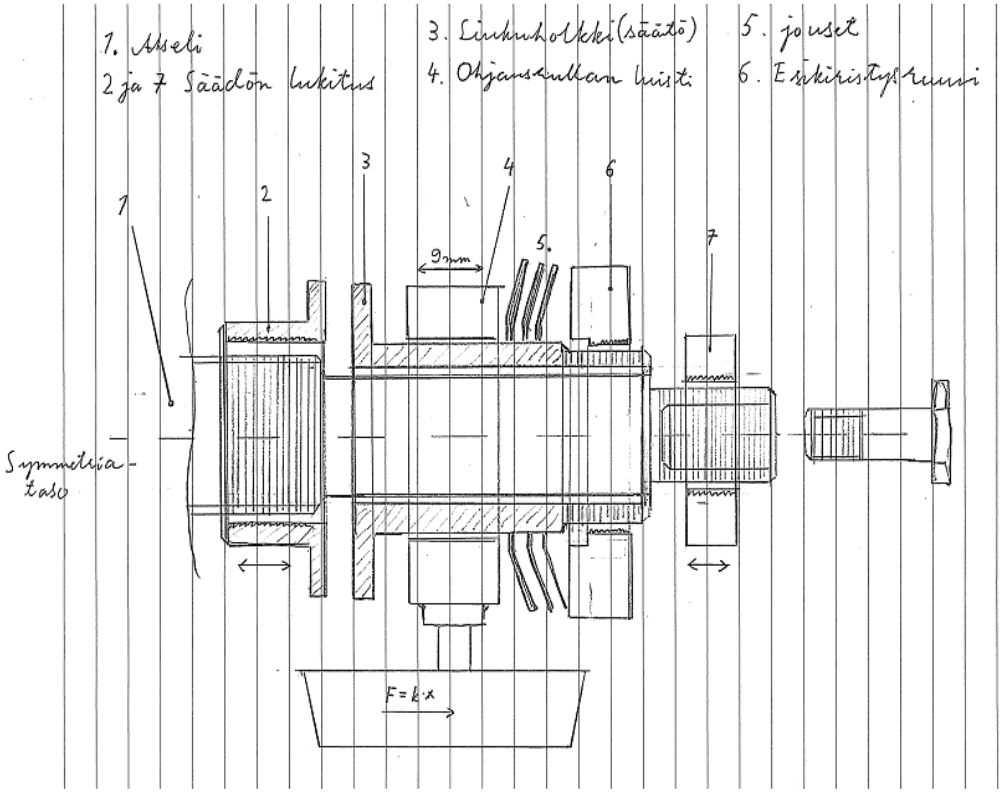

Figure 2b. The disc spring system

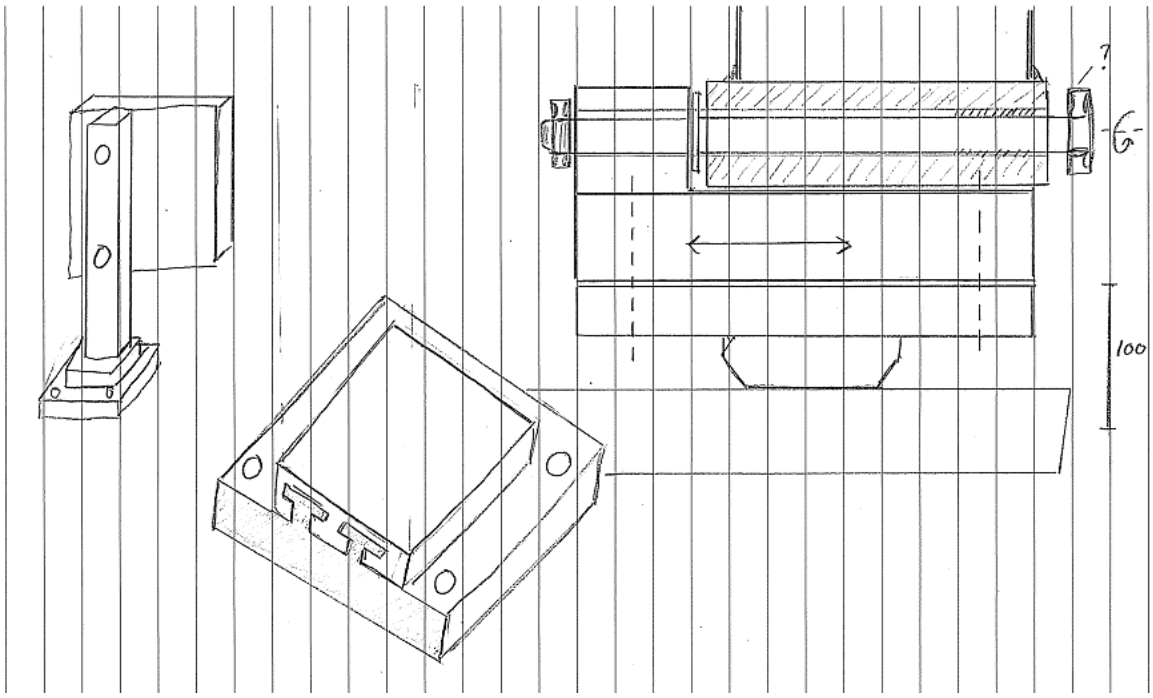

Figure 3a. The pin idea with a T-track adjustment

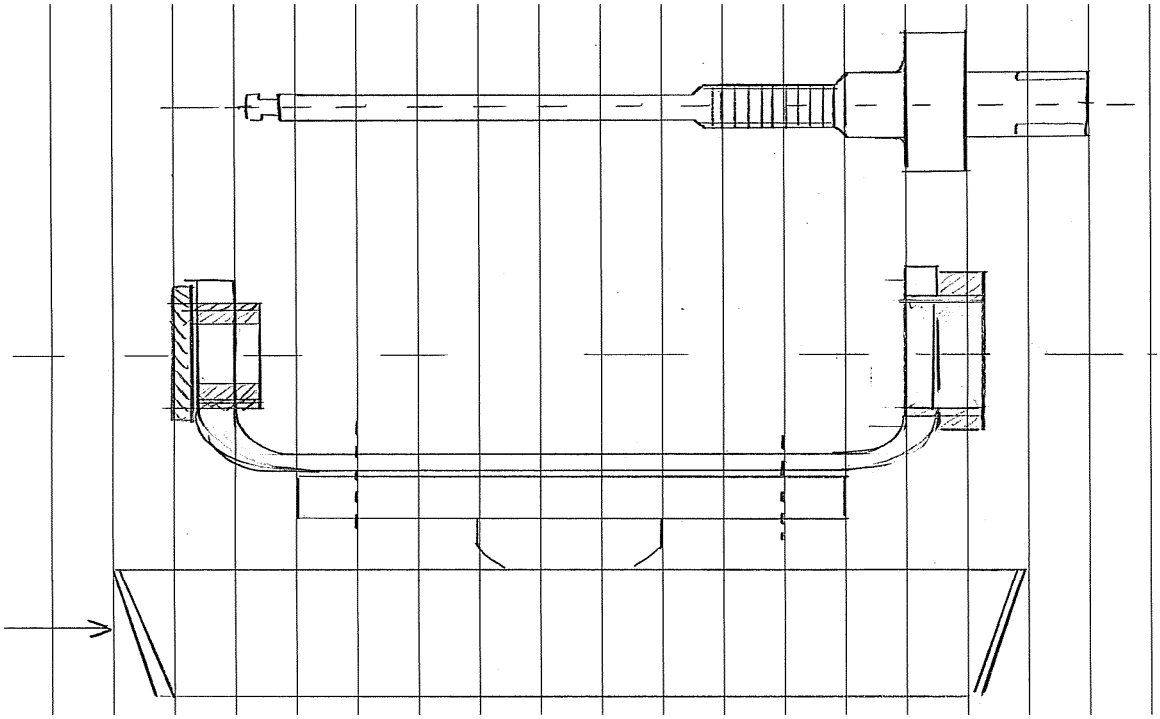

Figure 3b. The pin idea with a bended plate with an adjustment screw

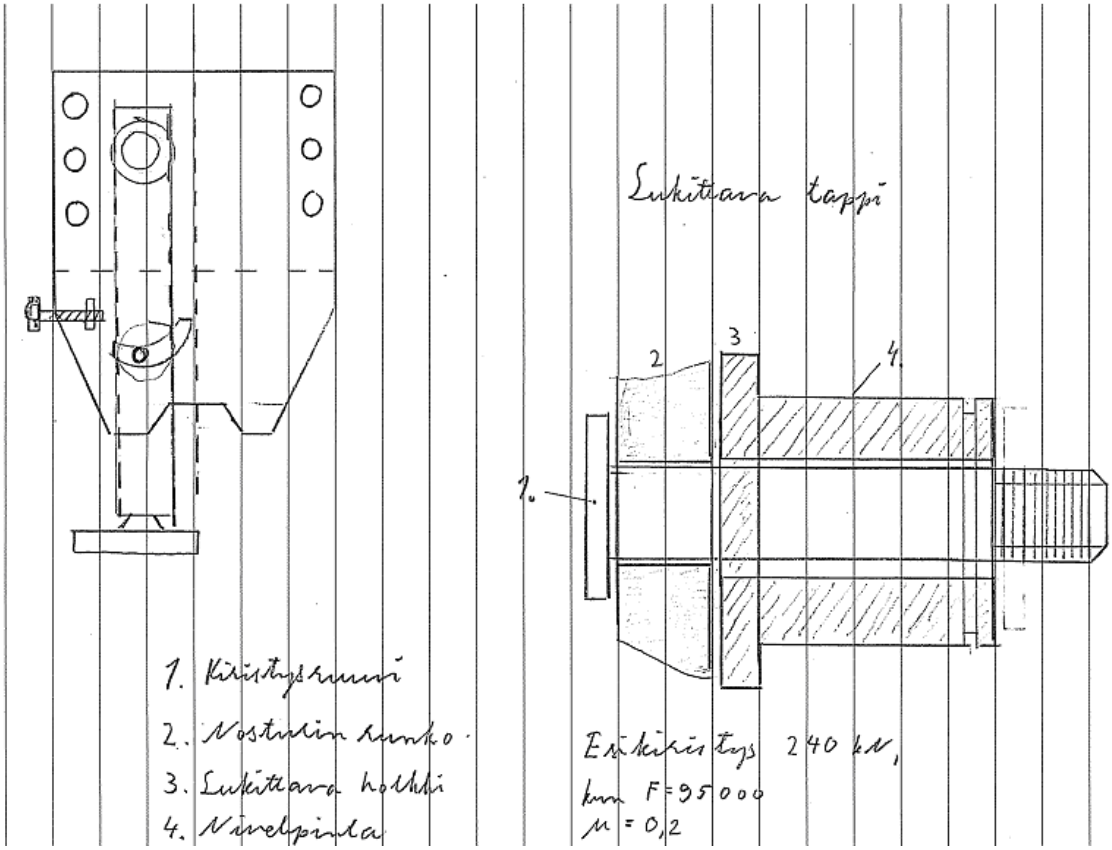

Figure 4. The adjustable lower pin

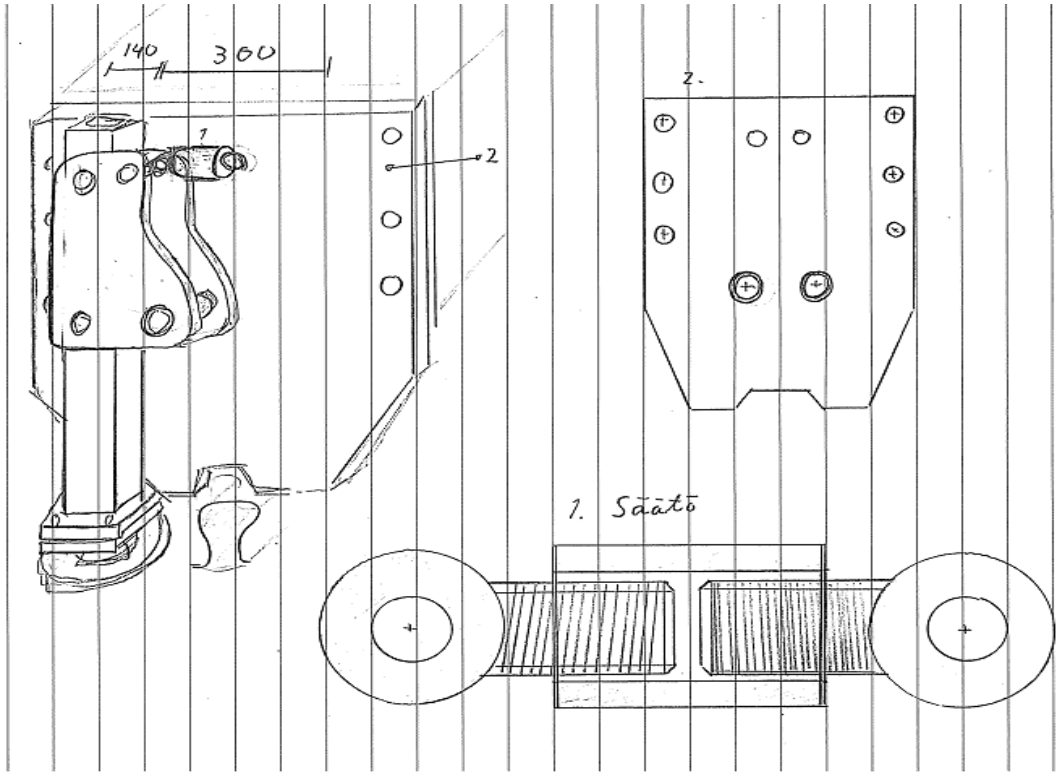

Figure 5a. The first shroud screw idea

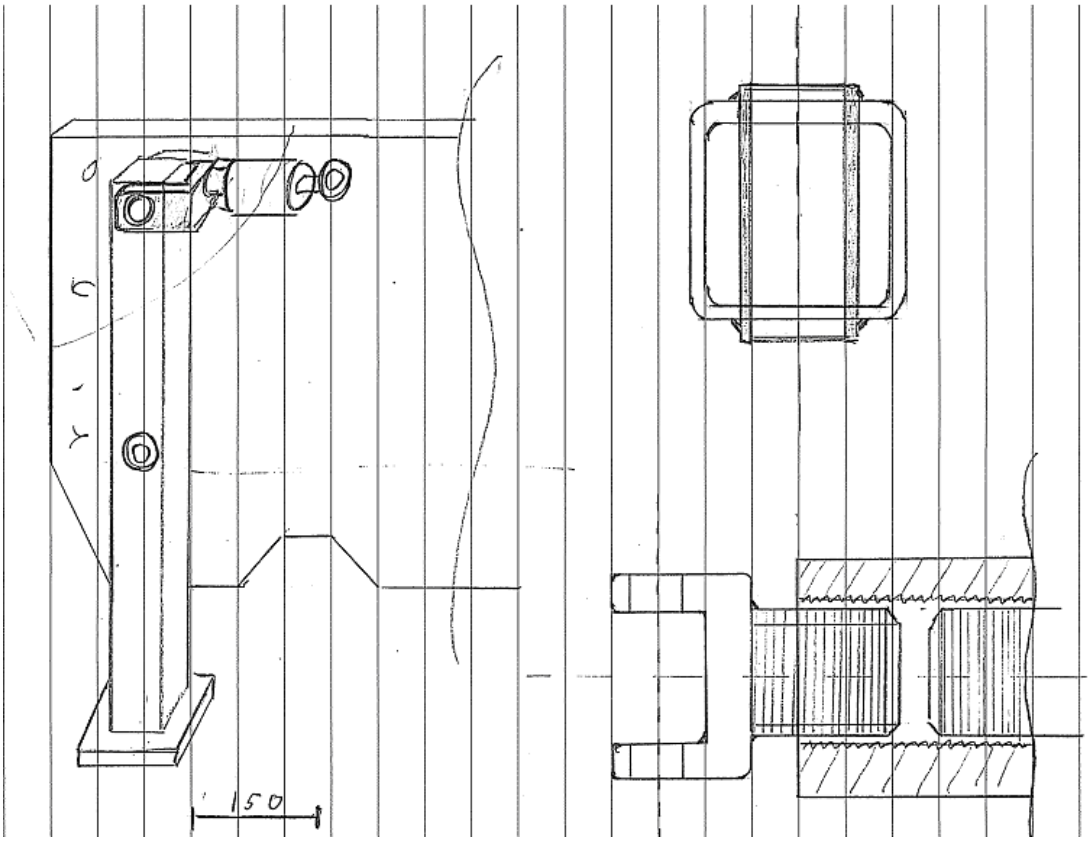

Figure 5b. The shroud screw idea for further development work

THE SEARCH FOR THE LEG PROFILE

Profile 100x200x8 2 ft skew, F 54685 N

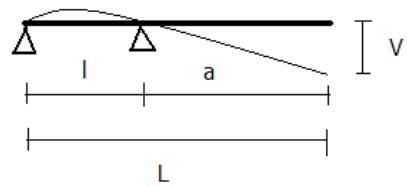

(mm)

$E := 210000 \quad I := 705 \cdot 10^4 \quad a := 608 \quad L := 1100$

$l := L - a \quad l = 492 \quad v := 5$

$F := \frac{3 \cdot E \cdot I \cdot v}{a^2 \cdot (l + a)} \quad F = 5.461 \times 10^4$

$w := 141 \cdot 10^3 \quad M := F \cdot a \quad M = 3.32 \times 10^7$

$\sigma_b := \frac{M}{w} \quad \sigma_b = 235.496$ Mpa

Bending stress for the 3 ft skew case, F 82029 N

profile 100x200x8

$F := 82029 \quad a := 608$

$w := 141 \cdot 10^3 \quad M := F \cdot a$

$M = 4.987 \times 10^7$

$\sigma_b := \frac{M}{w}$

$\sigma_b = 353.714$ Mpa

PIN FORCES

For the 2 ft skew F=54685 N

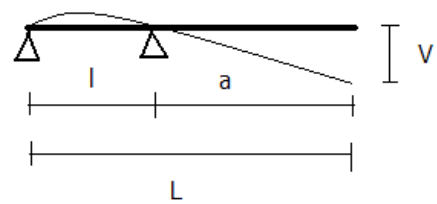

(mm)

$a := 608 \quad L := 1100 \quad l := 498$

$F := 54685$

Upper pin force F_{upper}

$$F_{upper} := \frac{F \cdot a}{l}$$

$$F_{upper} = 6.676 \times 10^4 \quad N$$

Surface stress on upper pins

Diameter is 25.4

$A := (25.4 \cdot 25) \cdot 2$

$A = 1.27 \times 10^3$

$$\sigma_{surf} := \frac{F_{upper}}{A}$$

$\sigma_{surf} = 52.57$ MPA

Shear on pin (2ft skew)

$$A_{axel} := \left(\frac{25.4^2 \cdot \pi}{4}\right) \cdot 2$$

$A_{axel} = 1.013 \times 10^3$

$$\tau_{shea} := \frac{F_{upper}}{A_{axel}}$$

$\tau_{shea} = 65.88$ MPa

For the 3 ft skew F=82027.5 N

$a := 608 \quad L := 1100 \quad l := 498$

$F := 82027.5$

Upper pin force

$$F_{upper} := \frac{F \cdot a}{l}$$

$$F_{upper} = 1.001 \times 10^5$$

Surface stress on upper pin

Diameter is 25.4

$$A := (25.4 \cdot 25) \cdot 2$$

$$A = 1.27 \times 10^3$$

$$\sigma_{surf} := \frac{F_{upper}}{A}$$

$$\sigma_{surf} = 78.855 \quad \text{MPA}$$

Shear on pin (3ft skew)

$$A_{axel} := \left(\frac{25.4^2 \cdot \pi}{4}\right) \cdot 2$$

$$A_{axel} = 1.013 \times 10^3$$

$$\tau_{shea} := \frac{F_{upper}}{A_{axel}}$$

$$\tau_{shea} = 98.82 \quad \text{MPa}$$

BRONZE BUSHINGS

For the 3 ft skew

$a := 608 \quad L := 1100 \quad l := 498$

$F := 82027.5$

Lower pin force F_{lower}

$$F_{lower} := \frac{F \cdot (l + a)}{l}$$

The lower pin has two bushings

$$\frac{F_{lower}}{2} = 9.109 \times 10^4$$

Pin diameter is 40 mm and length of the hole is 25 mm

Surface pressure on pin is

$$\sigma_{surf} := \frac{9.109 \times 10^4}{25 \cdot 40}$$

$\sigma_{surf} = 91.09$ MPa When 3ft skew

2 ft skew, surface pressure is $\left(\frac{2}{3}\right) \cdot 91.09 = 60.727$ MPa

1 ft skew, surface pressure is $\left(\frac{1}{3}\right) \cdot 91.09 = 30.363$ MPa

BEARING LIFE CALCULATIONS

Dynamic calculation

For the bearing:

Basic radial rating C is 249 kN (1 rpm)

P is radial force

n is 180 1/MIN (crane moves about 3 m/s)

$$L_{10} := \left(\frac{C}{P}\right)^{\frac{10}{3}} \cdot \left(\frac{1 \cdot 10^6}{60 \cdot n}\right)$$

Explanations for values 0.2 and 2 in miner s life calculations:

For 2, the crane moves in both directions when the rollers are alternately exposed to the skew forces

For 0.2, roller wheels are rolling about 20% of calender time

TIMKEN BEARING

For 2 ft skew (7 %): 10 years=87600 hours

$P := 54685 \quad C := 249000 \quad n := 180$

$$L_{10} := \left(\frac{C}{P}\right)^{\frac{10}{3}} \cdot \left(\frac{1 \cdot 10^6}{60 \cdot n}\right)$$

$L_{10} = 1.449 \times 10^4$ hours

Miner s life calculations

$$\frac{\frac{87600 \cdot 0.20}{14488}}{2} = 0.605 \qquad 0.605 \cdot 0.07 = 0.042$$

For 1 ft skew (93%):

$P := 27342.9 \quad C := 249000 \quad n := 180$

$$L_{10} := \left(\frac{C}{P}\right)^{\frac{10}{3}} \cdot \left(\frac{1 \cdot 10^6}{60 \cdot n}\right)$$

$L_{10} = 1.46 \times 10^5$ hours

$$\frac{\frac{87600 \cdot 0.20}{1.46 \times 10^5}}{2} = 0.06 \qquad 0.06 \cdot 0.93 = 0.056$$

Sum $0.0423 + 0.056 = 0.098$

$$\frac{10}{0.098} = 102.041 \text{ years}$$

For 3 ft skew (7 %):

$P := 82028 \quad C := 249000 \quad n := 180$

$$L_{10} := \left(\frac{C}{P}\right)^{\frac{10}{3}} \cdot \left(\frac{1 \cdot 10^6}{60 \cdot n}\right)$$

$L_{10} = 3.75 \times 10^3$ hours

Miner s life calculations

$$\frac{\frac{87600 \cdot 0.20}{3.75 \times 10^3}}{2} = 2.336 \qquad 2.336 \cdot 0.07 = 0.164$$

For 1 ft skew (93%):

$P := 27342.9 \quad C := 249000 \quad n := 180$

$$L_{10} := \left(\frac{C}{P}\right)^{\frac{10}{3}} \cdot \left(\frac{1 \cdot 10^6}{60 \cdot n}\right)$$

$L_{10} = 1.46 \times 10^5$ hours

$$\frac{\frac{87600 \cdot 0.20}{1.46 \times 10^5}}{2} = 0.06 \qquad 0.06 \cdot 0.93 = 0.056$$

Sum $0.164 + 0.056 = 0.22$

$$\frac{10}{0.22} = 45.455 \quad \text{years}$$

TIMKEN

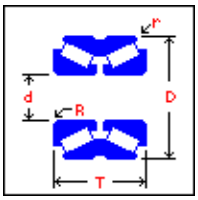

Bearing Search – Data

Prefix/Suffix Info
DXF File Creation
Print
close window
Bearing Type TRB
Bearing Subtype TDO
Series 495
Cone 497
Cup 493D
Cone Hardening Type Case carburized
Cup Hardening Type Case carburized
Cone Bore Diameter (d) 85.725 mm
Cup Outside Diameter (D) 136.525 mm
Bearing Width (T) 69.850 mm
C90 (1-Row Basic Radial Rating for 90M Rev.) 37.1 kN
C90(2) (2-Row Basic Radial Rating for 90M Rev.) 64.6 kN
C90(4) (4-Row Basic Radial Rating for 90M Rev.) 129 kN
C1 (1-Row Basic Radial Rating for 1M Rev.) 143 kN
C1(2) (2-Row Basic Radial Rating for 1M Rev.) 249 kN
C1(4) (4-Row Basic Radial Rating for 1M Rev.) 498 kN
Ca90 (1-Row Basic Thrust Rating for 90M Rev.) 28.2 kN
C(0) (Static Radial Rating) 216 kN
Ca(0) (Static Thrust Rating) 280 kN
K (.39 / Tan(contact angle)) 1.31
e (1.5 * Tan(contact angle)) 0.44
Y1 (0.45 / Tan(contact angle)) 1.52
Y2 (0.67 / Tan(contact angle)) 2.26
Cone Width 29.769 mm
Max Shaft Fillet Radius 3.5 mm
Cone BF Backing Diameter 99.0 mm
Min cage clearance inside cone BF 2.5 mm
Cup Width 53.975 mm
Max Housing Fillet Radius 0.8 mm
Cup RF Backing Diameter 130.0 mm
Cup LF Backing Diameter 130.0 mm
Remarks
>> GROOVE IN OD CENTER 493D
>> HOLES IN OD CENTER 493D

For 2 ft skew (7 %):

$P := 54685 \quad C := 280000 \quad n := 180$

$$L_{10} := \left(\frac{C}{P}\right)^{\frac{10}{3}} \cdot \left(\frac{1 \cdot 10^6}{60 \cdot n}\right)$$

$$L_{10} = 2.142 \times 10^4 \quad \text{hours}$$

Miner s life calculations

$$\frac{\frac{87600 \cdot 0.20}{2.142 \times 10^4}}{2} = 0.409 \qquad 0.409 \cdot 0.07 = 0.029$$

For 1 ft skew (93%):

$P := 27342.9 \quad C := 280000 \quad n := 180$

$$L_{10} := \left(\frac{C}{P}\right)^{\frac{10}{3}} \cdot \left(\frac{1 \cdot 10^6}{60 \cdot n}\right)$$

$$L_{10} = 2.159 \times 10^5 \quad \text{hours}$$

$$\frac{\frac{87600 \cdot 0.20}{2.159 \times 10^5}}{2} = 0.041 \qquad 0.041 \cdot 0.93 = 0.038$$

Sum $0.029 + 0.038 = 0.067$

$$\frac{10}{0.067} = 149.254 \text{ years}$$

For 3 ft skew (7 %):

$P := 82028 \quad C := 280000 \quad n := 180$

$$L_{10} := \left(\frac{C}{P}\right)^{\frac{10}{3}} \cdot \left(\frac{1 \cdot 10^6}{60 \cdot n}\right)$$

$$L_{10} = 5.545 \times 10^3 \quad \text{hours}$$

Miner s life calculations

$$\frac{\frac{87600 \cdot 0.20}{5.545 \times 10^3}}{2} = 1.58 \qquad 1.58 \cdot 0.07 = 0.111$$

For 1 ft skew (93%):

$P := 27342.9 \quad C := 280000 \quad n := 180$

$$L_{10} := \left(\frac{C}{P}\right)^{\frac{10}{3}} \cdot \left(\frac{1 \cdot 10^6}{60 \cdot n}\right)$$

$L_{10} = 2.159 \times 10^5$ hours

$$\frac{\frac{87600 \cdot 0.20}{2.159 \times 10^5}}{2} = 0.041 \qquad 0.041 \cdot 0.93 = 0.038$$

Sum $0.111 + 0.038 = 0.149$

$$\frac{10}{0.149} = 67.114 \quad \text{years}$$

Tapered roller bearings, single row, metric bearings

Tolerances ,
Recommend
Shaft and ho

Principal dimensions			Basic load ratings		Fatigue load limit	Speed ratings		Mass	Designation
			dynamic	static		Reference speed	Limiting speed		
d	D	T	C	C_0	P_u				
mm			kN		kN	r/min		kg	-
85	130	29	140	224	25,5	3400	4800	1,35	**32017 X/Q**

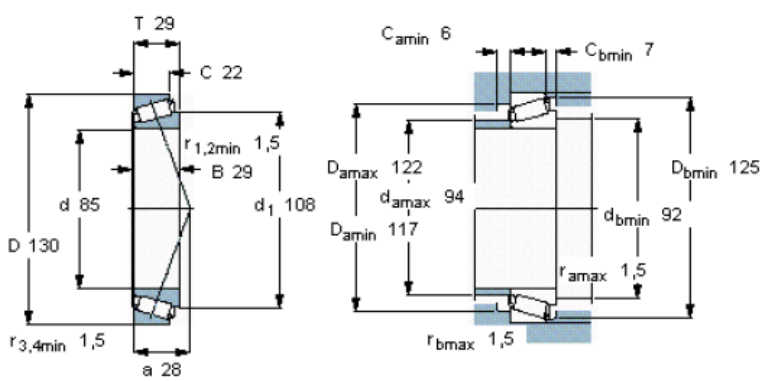

Calculation factors
e 0,44
Y 1,35
Y_0 0,8

THE WORKING LIFE TIME OF THE NEW STRUCURE

Displacements

1 ft skew D= 3.148 mm (F=27343 N)

2 ft skew D= 6.296 mm (F=54686 N)

3 ft skew D= 9.444 mm (F=82029 N)

Bending stresses

1 ft skew σ=118 MPa

2 ft skew σ=235 MPa

3 ft skew σ=352 MPa

See appendix IV for bending stresses, also compared to FE analyses

Fatigue calculations

Hot spot $\sigma_{hs} := 1.67 \cdot \sigma_1 - 0.67 \cdot \sigma_2$ $FAT := 100$

IIW document XIII-1965-03/XV-1127 -03, page 78

HOTSPOT PATH DATA

S	STRIGHT
0.0000	157.83
0.55771	144.60
1.1154	128.02
1.6732	115.94
2.2309	108.66
2.7886	105.36
3.3464	103.09
3.9042	101.39
4.4619	99.831
5.0197	98.650
5.5775	97.713
6.1353	96.816
6.6931	96.021
7.2510	95.363
7.8088	94.745
8.3667	94.151
8.9245	93.659
9.4824	93.208
10.040	92.777
10.598	92.412
11.156	92.120

For the 2 ft case

$\sigma_1 := 103$

$\sigma_2 := 94$

$\sigma_{hs} := 1.67 \cdot \sigma_1 - 0.67 \cdot \sigma_2$ $\sigma_{hs} = 109.03$ MPa

$$c := \frac{2000000}{\left(\frac{\sigma_{hs}}{FAT}\right)^3}$$

$c = 1.543 \times 10^6$ cycles

For the 3 ft case

$\sigma_{hs} := 163.545$

$$c := \frac{2000000}{\left(\frac{\sigma_{hs}}{FAT}\right)^3}$$

$c = 4.572 \times 10^5$ cycles

For the 1 ft case

$\sigma_{hs} := 54.515$

$$c := \frac{2000000}{\left(\frac{\sigma_{hs}}{FAT}\right)^3}$$

$c = 1.234 \times 10^7$ cycles

Load history

7 % 2 ft skew, cycles per year 4485.6 $(178 \cdot 360 \cdot 0.07) = 4.486 \times 10^3$

93 % 1 ft skew, cycles per year 1281.6 $178 \cdot 360 \cdot 0.93 = 5.959 \times 10^4$

1 ft skew

$$\frac{5.959 \times 10^4}{1.234 \times 10^7} = 4.829 \times 10^{-3}$$

2 ft skew

$$\frac{4485.6}{1.543 \times 10^6} = 2.907 \times 10^{-3}$$

Palmgren-Miner sum

$$4.829 \times 10^{-3} + 2.907 \times 10^{-3} = 7.736 \times 10^{-3}$$

$$\frac{1}{7.736 \times 10^{-3}} = 129.266 \quad \text{years}$$

Load history

7 % 3 ft skew, cycles per year 4485.6 $(178 \cdot 360 \cdot 0.07) = 4.486 \times 10^{3}$

93 % 1 ft skew, cycles per year 1281.6 $178 \cdot 360 \cdot 0.93 = 5.959 \times 10^{4}$

1 ft skew

$$\frac{5.959 \times 10^{4}}{1.234 \times 10^{7}} = 4.829 \times 10^{-3}$$

3 ft skew

$$\frac{4485.6}{4.572 \times 10^{5}} = 9.811 \times 10^{-3}$$

Palmgren-Miner sum

$$4.829 \times 10^{-3} + 9.811 \times 10^{-3} = 0.015$$

$$\frac{1}{0.015} = 66.667 \qquad \text{years}$$

UNWELDED PART, THE LEG

S355

$\sigma_{ultimate} := 520$ MPa

Bending stresses:

1 ft skew $\sigma_s := 118$ MPa

2 ft skew $\sigma_{s1} := 235$ MPa

3 ft skew $\sigma_{s2} := 352$ MPa

$\mu := 1.4$ safety factor

$$\sigma_{wohler} := \left(\frac{\sigma_{ultimate}}{2}\right)\cdot 0.8\cdot 0.8\cdot \frac{1}{\mu}$$

0.8 is factor for quality of surfice

0.8 is probability factor when using 97.5% design wohler-curve, 2.5 % will fail

$\sigma_{wohler} = 118.857$

$118.857 < \sigma_{s1}$

$118.857 < \sigma_{s2}$

WELDED LEG

For 3 ft skew

$FAT := 125$

$\sigma_{hs} := 352$

IIW document XIII-1965-03/XV-1127 -03, page 56

$$c := \frac{2000000}{\left(\frac{\sigma_{hs}}{FAT}\right)^3}$$

$c = 8.956\times 10^4$ cycles

$$\frac{4.486\times 10^3}{8.956\times 10^4} = 0.05$$

For 1 ft skew

$FAT := 125$

$\sigma_{hs} := 118$

$$c := \frac{2000000}{\left(\frac{\sigma_{hs}}{FAT}\right)^3}$$

$c = 2.377 \times 10^6$ cycles

$$\frac{5.959 \times 10^4}{2.377 \times 10^6} = 0.025$$

$0.05 + 0.025 = 0.075$

$\frac{1}{0.075} = 13.333$ years

when 3 ft skew 7 %
and 93 % 1 ft skew

For 2 ft skew

$FAT := 125$

$\sigma_{hs} := 235$

$$c := \frac{2000000}{\left(\frac{\sigma_{hs}}{FAT}\right)^3}$$

$c = 3.01 \times 10^5$ cycles

$$\frac{4.486 \times 10^3}{3.01 \times 10^5} = 0.015$$

$0.025 + 0.015 = 0.04$

$\frac{1}{0.04} = 25$ years

when 2 ft skew 7%
and 93 % 1 ft skew