LAPPEENRANTA UNIVERSITY OF TECHNOLOGY

Faculty of technology

LUT Mechanical

Degree Program in Mechanical Engineering

Ming Sun

QUALITY MANAGEMENT OF OUTSOURCING WELDED STRUCTURE: CASE CHINA

Examiners: **Professor Veli Kujanpää**

Professor Jukka Martikainen

Instructors: **Heikki Mäkelainen**

ABSTRACT

Lappeenranta University of Technology

Faculty of Technology

LUT Mechanical

Ming Sun

Quality management of outsourcing welded structure: case China

Master's Thesis

2009

104 pages, 48 pictures, 5 tables and 6 appendixes

Examiners: Professor Veli Kujanpää

Professor Jukka Martikainen

Keywords: Total welding management, PDCA, MIG/MAG, culture orientation and welding quality

For any international companies who wish to enter the Chinese market, quality is base on the fundamental. The companies are coming to realize the importance of quality gradually, thus companies have been put the quality problems on the agenda. The competitiveness of companies comes from quality. Quality is the key to success, and it can decide that the companies can be accepted or eliminated by the market. Due to the obvious benefits, the demand of the method of how to achieve high quality of product keeps growing.

During achieving the high quality process, the main troubles come from the impact between Eastern and Western culture. Chinese culture which is different with Western one have lasted as long as five thousand years. Such a culture deeply rooted in the hearts of Chinese people,

and effected generation after generation of Chinese people's working style and ways of thinking. This thesis determines how to find a good fit point between Eastern and Western culture. Doing right thing by the right way.

The nature of improving quality is improving management level in fact. "How to manage, who should be managed", the thesis explains the basic and best option to achieve those. It describes three-dimension-style management to monitoring the working process. This kind of management style can inspect production process from horizontal and vertical direction. In this management way, it defines effective evaluation system to every subcontractor, and makes the companies to achieve the ultimate goal - satisfy quality. Because of the importance of human factor, the thesis determines the range of training of the inspector and welder due to the current situation of China. The results show that in order to reach reliable training effective evaluation, not only the quality of the human but also the ultimate goal of product quality.

TABLE OF CONTENTS

LIST OF FIGURES

1. INTRODUCTION

First of all, the right communication way can shorten the working process, it can get the maximum results by little effort. This part of the thesis describes Chinese main orientations, leadership authority structure and comparison working styles and communication ways between the western and eastern.

This thesis is not about teaching the welder how to do the welding work. It is a completely new paradigm for managing a business involving welding. In this thesis, it would share a system that marries the science of welding technology with sound principles from a total welding management system. This thesis will provide the details of this proven integrated management approach that can help to transform the welding operations from a cost centre to a profit centre. This is especially timely in today's globally competitive business environment. During studying about the total welding quality management, it would make the reader to know the principles values, concepts and management.

In the concept of total welding management, the human factor is essential. Improving the quality of the welder and inspector, this aspect is related to the success or failure of the welding quality management project. Considering about the current situation of the welder and inspector, most welders and inspectors have the basic knowledge about welding. The training for the welders and inspectors should focus on the actual demands. In the actual work, the welders have the difficulty for reading the WPS, and cannot set up the good safety understanding. The inspectors from the ABB company do not have the awareness of setting up the database for welding defects. All of the aspects are quiet important in the welding quality management, and more important in the future welding work.

The custom is a second nature. Good working habits must be formed in first case by force and in long term period the purpose is to develop a self-control. The checklist system could point out the most important key points during the welding process. It also can make the welder clear about the importance of every step of welding.

After the checking the actual situation by the inspectors of ABB company(ShangHai), we can understand the actual situation of intuitive of the subcontractors. To a certain extent, it can give an objective assessment for the subcontractors. Form the view of business, the profit is the driving force for every subcontractor. Depending on the results of the checklists, the ABB company(ShangHai) can make the decision and give the reward or punishment to the subcontractors. This rule can mobilize the enthusiasm of the subcontractors, and it also can give them a friendly reminder concerning the poor welding quality products output. The subcontractors with poor welding quality could be better to recognize their own shortcomings and inadequacies in the work. For the good members of the subcontractors, it also can remind them and do not make the similar problems in the future work.

2. CULTURAL ISSUES

The China is a long history country. The Chinese ways of working and thinking are deeply rooted in the minds of the Chinese people. Comparing to the western culture and working styles, the Chinese one has its own difference and specificity. The foreign company which wants to develop the Chinese market must be in-depth understanding of the Chinese culture issues. The foreign company would achieve maximum results with little effort.

2.1 Chinese interpersonal orientation

For the orientation of the Chinese interpersonal problems, the east and west researchers have done a lot of research. Many researchers believe the Chinese human relation is a social orientation, while the westerner's interpersonal relations model is mainly based on personal preferences(See in Fig. 1, 2,3).[1]

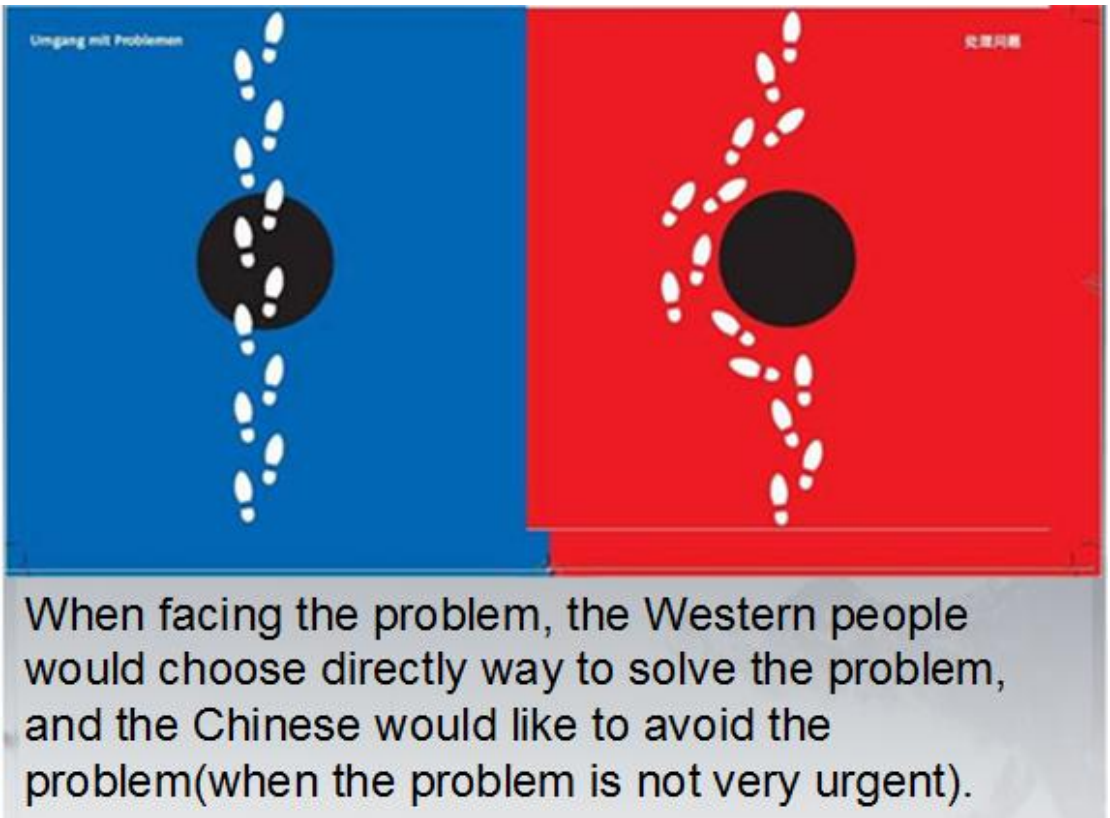

Figure 1. The way of tackling problems[2]

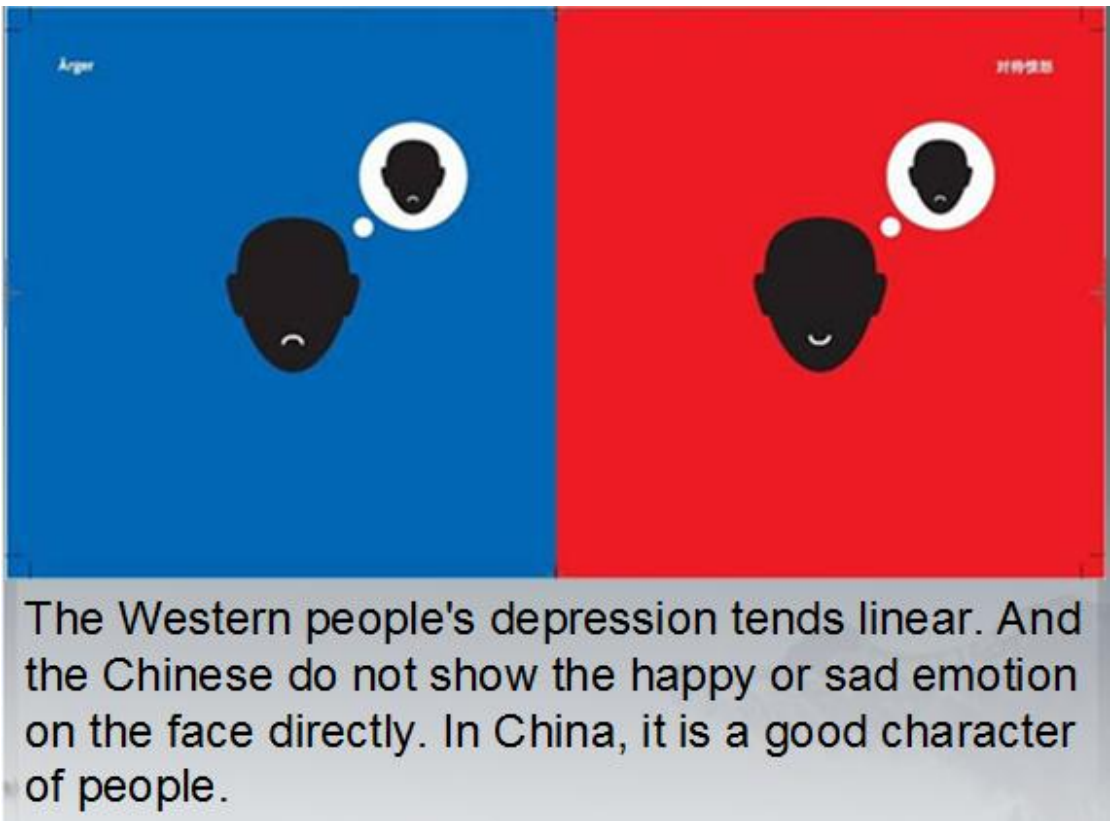

Figure 2. The way of expression [3]

The performance of Chinese social orientation is shown as following:

- To access other people's appreciation or praise
- To maintain their relationships with others harmoniously
- To protect their self-esteem
- To hope give others good impression
- To hope others to accept themselves
- To avoid other's punishment, ridicule and retaliation
- To avoid difficulties and embarrassment
- To avoid conflict with others

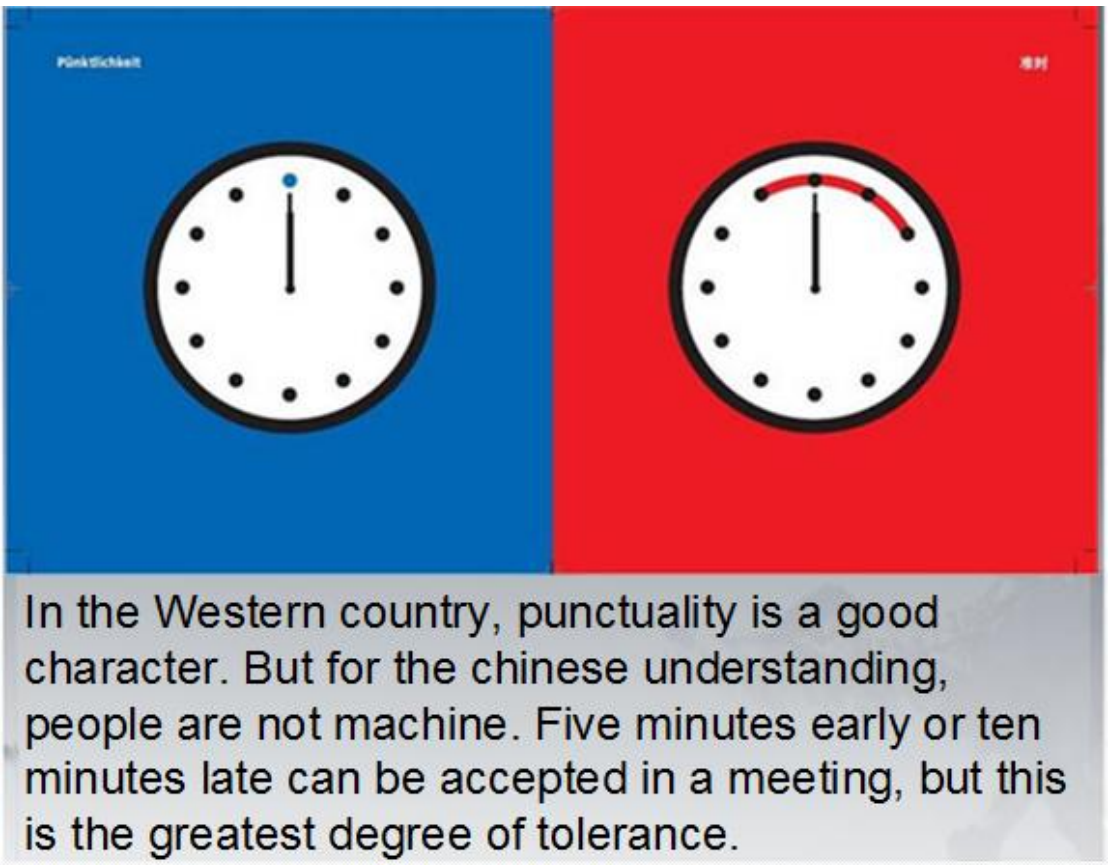

Figure 3. Sense of time[4]

2.2 The features of Chinese social-oriented interpersonal relationships

Considering from China's history and cultural traditions, China's social orientation has four main characteristics: family orientation, relationship orientation, authority orientation and other-people orientation. From the view of internal relationship, these four orientations are closely linked to each other(See in Fig.4). They represent how individuals convergence to group (family orientation), to other individuals (relationship orientation), to authority (authority orientation) and to certain other people (other-people orientation). [5]

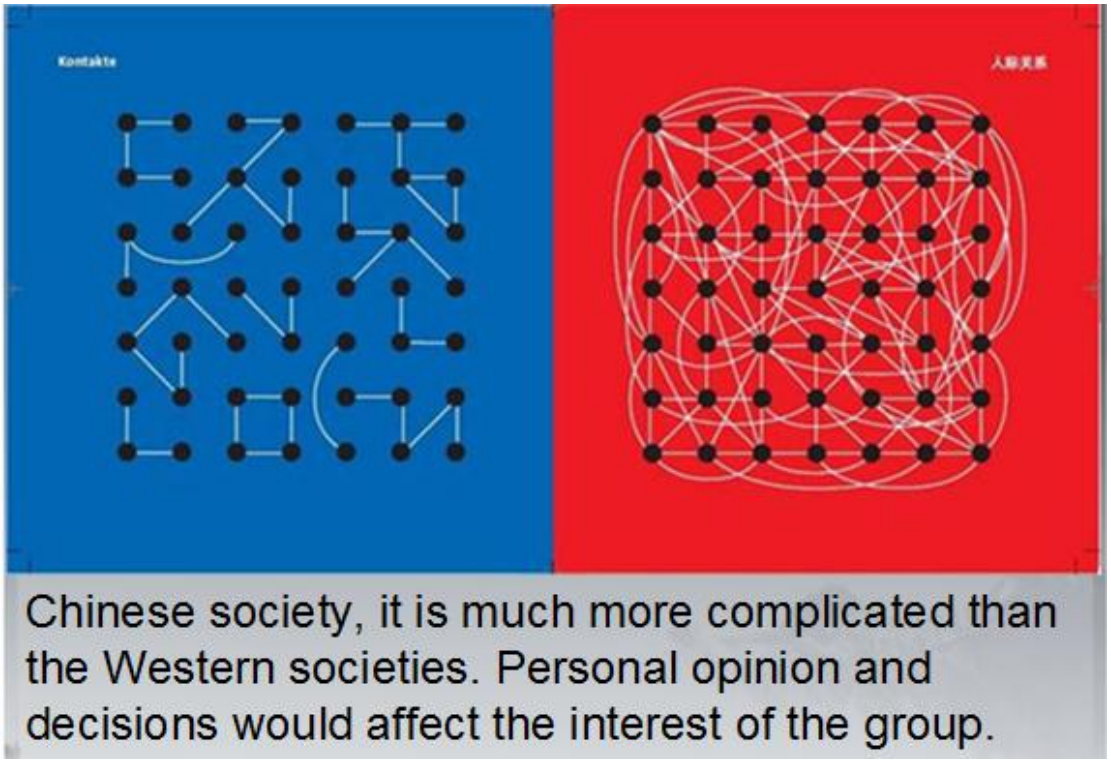

Figure 4. Chinese people's interpersonal relationships[6]

1) Family orientation

In this part, the family orientation is researched by broad meaning. It is not just some members of family that are connected by blood relationship. Family doctrine is the most important feature of Chinese society, whether traditional Chinese society, or in modern

Chinese society. Family doctrine occupies a pivotal position. The orientation is in vogue in the China's rural areas.[5]

2) Relationship orientation

The interpersonal relationships are the most important dimension of Chinese culture and Chinese people's daily life. These relationship-oriented features include the role of relation, the interdependence of relation, the harmony of relation and the decision of relation.

The Chinese emphasize on defining their identity by social relations. For example, I am somebody's son, or I am somebody's student. (Somebody must be famous or important role of the group). Chinese people have strong interpersonal interdependence. When the Chinese people develop relations with others, the one of main purposes is getting reciprocation that the relationship brings.[5]

In the Chinese people's interpersonal relations model, the harmony is a very important aspect. Chinese people emphasize on people-people's harmony, even to the unreasonable point. If some people break it, whatever it is reasonable, it must not be right. In order to maintain the harmonious relations, the individuals have to meet the expectations of other people. In some level, we can call it as sacrifice. The individuals must be carefully to any details, and pay more attention to other people's self-respect. The purpose is avoiding conflicts. [5] There are relations in any society, but in the role of Chinese society relations, it is far beyond the impact on the other societies. The Chinese people's interpersonal relationship can be divided by three types: family relation, friend relation and stranger relation. Chinese will decide the distribution of benefits by the different type of relationship.

3) Authority orientation

In the traditional Chinese society, father is the absolute authority of each family. Under this

kind of system, father is the leader, whether in the economic, ideological, family regulations and the levels of hierarchy (See in Fig. 5). There is deep-tooted impact in the Chinese society. When the idea is extended to social life, it reflects on worship of authority. The Chinese people are very alert and sensitive to existence of the authority in any occasions. The Chinese people would pay a lot of time to getting the information about other people, such as age, position and generation etc. and then they will make rank of those people.[5]

Figure 5. Authority structure[7]

The Chinese people respect authority, whatever the authorities are dead or alive. In the Chinese's heart, the authority never makes mistake. Even they made, the mistakes would not be big deal. The range of authority worship is large. If some people is an authority in a special field, the other Chinese people will think they are authority in another field. In the view of time, the authority has no limits. Teacher will always be a teacher.[5] In a Chinese word, being authority in one day, always being authority. Because the authority is credible,

all-powerful and eternal, the behavior would have the dependence of the authority. The dependence is shown in temporary psychological disability. Even the most competent subordinates also feel incompetence in front of authority.

4) Other-people orientation

The Chinese people are sensitive to other-people opinion, and they will take a lot of time to collecting other people's opinions, especially for themselves(See in Fig. 6). According to other people's opinions, they can decide their behavior to achieve harmony with other people.[5] Whatever in the opinion or behavior, the Chinese people do not want to be different with other people, even they are more excellent than others. They will try to have same pace with others.

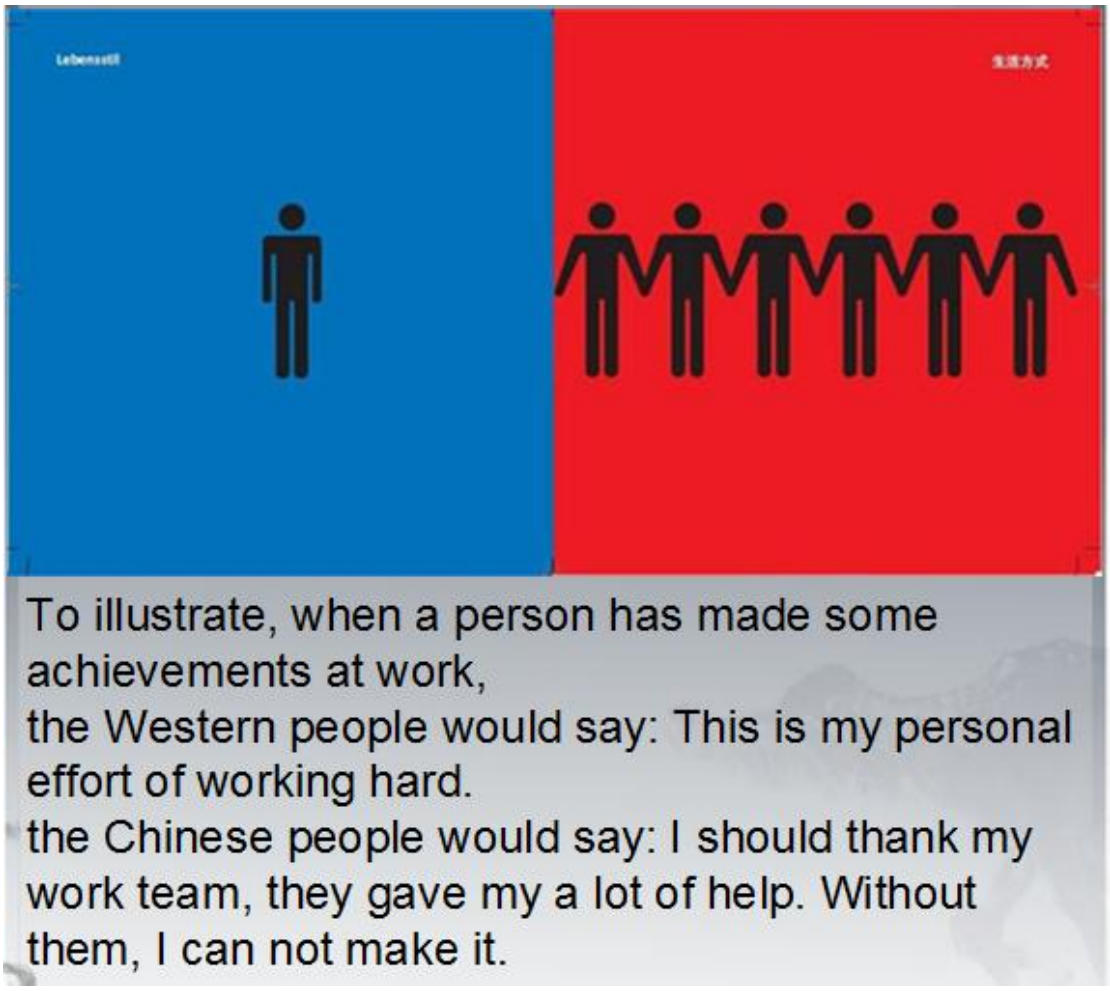

Figure 6. Working style and distribution of the benefit[8]

In the Chinese society, the interpersonal norms are the main criterion to measure a person.(See in Fig. 7). In fact, the Chinese people's stress the need of interpersonal norms far better than the law. The Chinese people look important on their own reputation. They often self-monitor to adjust the form and content to make them to leave a good impression on other people.

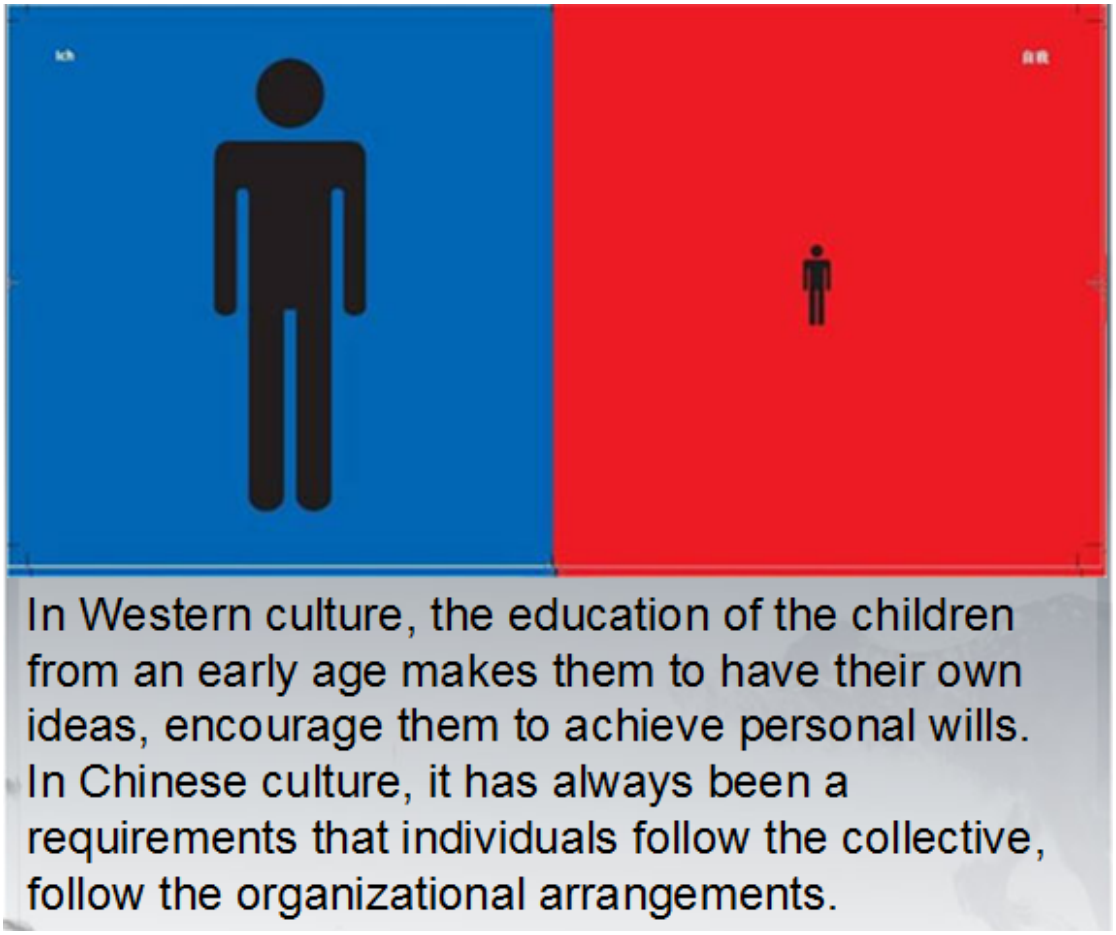

Figure 7. Self-perception[9]

In conclusion, the analysis of Chinese interpersonal relationship is based on Chinese traditional culture. Even the current Chinese society has change a lot, but Chinese interpersonal relationship model cannot have fundamental change. Understanding the characters of interpersonal relationship, it will be a great significance of cross-cultural exchange.

2.3 The comparison between Western & Eastern countries' communication style

Different countries also differ in the amount of detail they need to put in communication. In the so-called 'high context' cultures, very little detail actually needs to be said. A large amount of information is taken from the situation and this is used to interpret the speaker's words. Chinese people can understand the exact meaning of 'yes' (which varies from 'yes, absolutely' to 'yes, but no') when spoken by another Chinese person because they can read the speaker's expressions – the context(See in Fig. 8). Of course, people from Finland are lost here! Finland is a low-context culture. In Table 1, it would be about the same as Germany or Switzerland.[1]

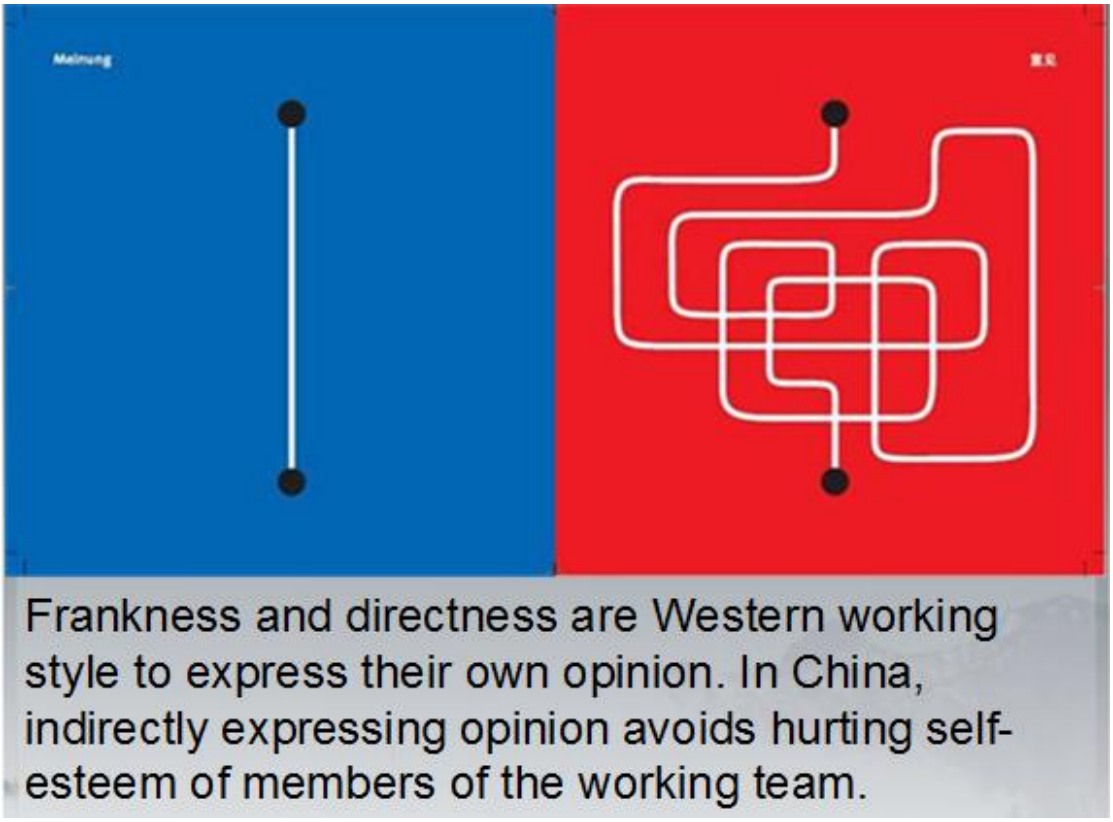

Figure 8. The way to express views[10]

High context countries tend to be homogenous populations with little history of immigration. Because the people share so much, they are able to understand their unspoken communication easily. Low context cultures, on the other hand, tend to be very specific about spoken information. The words are detailed and repeated, to make sure that the listener gets the messages. Low context countries are typically mixed populations with a long history of immigration and movement of people.

Table 1 High or low context of different languages[1]

	HIGH	LOW
Germany		XXXX
Switzerland		XXXX
USA		XXX
France	X	X
England	XX	
Middle East	XXX	
China	XXX	
Japan	XXXX	

The differences in the way that information is given in the two types of cultures can lead to confusion. High context people can feel patronized by low context communication. ‘Why are they spelling it out like that? Do they think I’m stupid? I know that, they said it already! I wish this guy would stop repeating!’

Low context people meanwhile are bemused by high context communication. ‘What do they mean? Where are the connections? What are they trying to say? I wish this guy would explain his point!’ Another problematic area is the focus on oral and written communication. High context people are happy with an oral agreement. They make a plan over the phone, and expect everyone to act. Low context people prefer things in writing. They make a tentative plan over the phone, then put it in writing, check everyone agrees with that version and then

implement the plan. It is clear to see how problems arise.[1]

The solution, of course, is to understand who you're dealing with and plan your communication to suit them. In international business, it is probably better to steer towards low context communication, because it ensures that everyone has the same understanding, even though it can seem slow and repetitive.

2.4 Communication style

Different cultures have different patterns of silence and overlap in conversation, and each is convinced that theirs is right and that other patterns are negative in some way. Coincidentally, the cultures between Finland and China are similar. It is important to remember that silence has different meanings in different cultures. In the countries where silence is golden, it is a positive sign. It shows respect, appreciation, politeness, and calmness, willingness to listen and think things thoroughly.

2.5 Authority structure

Many of the subcontractors are private enterprises. Most of the private enterprises can be divided by two types: family enterprise and friend enterprise. According to both of these types of enterprises, the leader of enterprise cannot open the authority structure. Not only most of leaders are in charge of management function, but also they make the decisions during business process. It can be described by a Chinese saying; the leader would be both of father and mother for the enterprise. (In most of Chinese family, the father makes the decision; the mother is in charge of management). From the view of economy, the authority structure is paternalistic management style. From the view of benefit, the policymaker and manager

should not be the same person. In the idea of modern enterprise management model, the CEO and chairman should be avoided in being the same one(See in Fig. 9). [11]

Figure 9. Authority structure and the art of leadership[12]

2.6 The negative impacts of paternalistic management style

Because of the limitations and randomness of paternalistic management of private enterprises, they result in business decision-making romantic and fuzzy. The decision-making process is just relying on "probably," "may," "estimate," "generally" and other non-rational decisions.

Enterprises lack a scientific and effective management mechanism. The leaders of enterprises manage depending on the subjective experience of the operator replacing of a sound mechanism and the objective facts. They bind the staffs by simply relying on the trust and

affection. Those leaders are responsible in everything. Because of too wide a responsibility, they are quiet exhausted, and the effects are not good.

Even those leaders attach importance to set up the management system, but they do not care about the management system carrying out. The rule of management is just a piece of paper what is sticking on the wall. Actually, no person will follow it. Considering about the aspect of affection, the emotion will overcome the rule. In a word, they have the management system, but they do not carry it out.

Because most of the leaders are senior statesman, they have an immense contribution to the enterprise. They establish the absolute authority. They would not accept the objection. The situation will lead to decrease the enterprise management level, and lose vitality. The enterprise fast tracks to decline.

Because of the relationship between the leader and enterprise is too close, it leads that how the leader thinks, how the staffs of enterprise do. Actually, they only know seeking the profit max and care about the short sight benefits. It is easier to make that the leaders are lack of long-term planning and rational strategic thinking. This is described in **Fig. 10**.

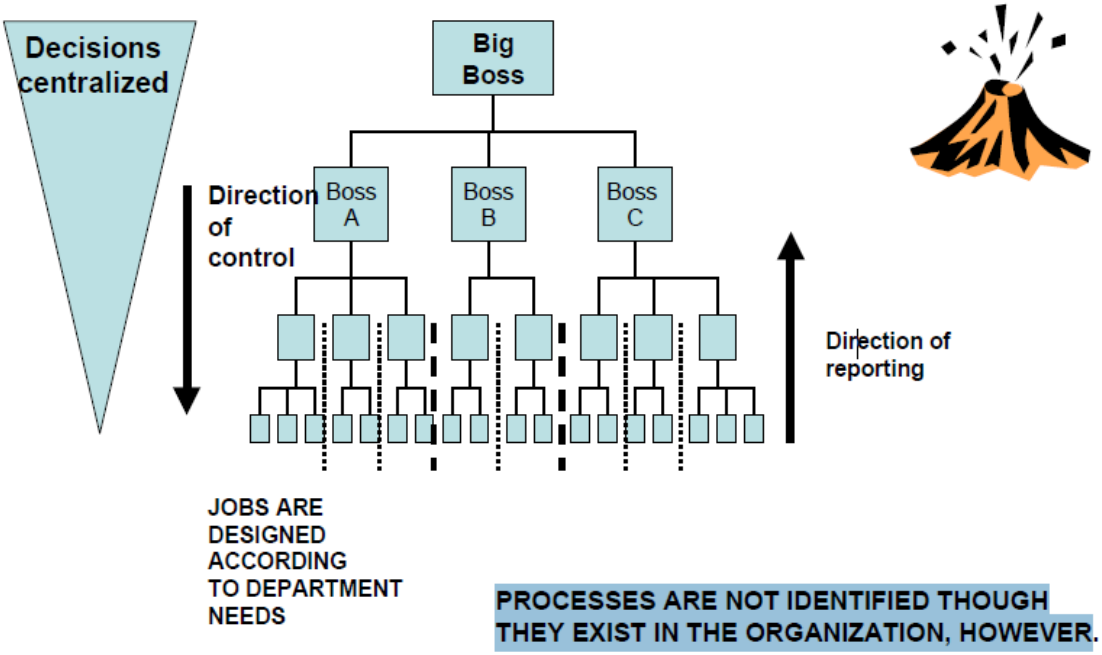

Figure 10. Authority structure in China[12]

3. TOTAL WELDING MANAGEMENT

The fine welding structure is mainly dependent on the design and manufacture, rather than relaying on the inspection. Monitoring and controlling all links in the processes is easy to find and solve problems, instead of inspection after product completed. This is prevention-oriented management(Prevention First). Welding management means following all steps in the processes in the correct order. Even if it is not possible to avoid all quality problems, the reasons of the problems should be easily ascertained and corrective measures taken, when they occur.[13]

It must be ensured that product quality is a basic requirement for production, and production inspection is a measure to achieve it. In order to ensure product quality, except for relying on every inspection methods to control it, it depends on strict management. Quality management is achieved through the establishment of an effective and user-friendly quality assurance system. First of all, from the concept of comprehensive quality management, the thesis shows the functions of welding quality assurance system, control chains and control procedures, the management system of quality assurance system and the responsibility of the relatives staffs. In addition to the above, the this work also expounds welding quality control and quality index before or during welding procedures. Because the comprehensive welding quality management is inspected during whole procedures, the contents as the following **Fig.11** should be belong to the scope of quality assurance system.[14]

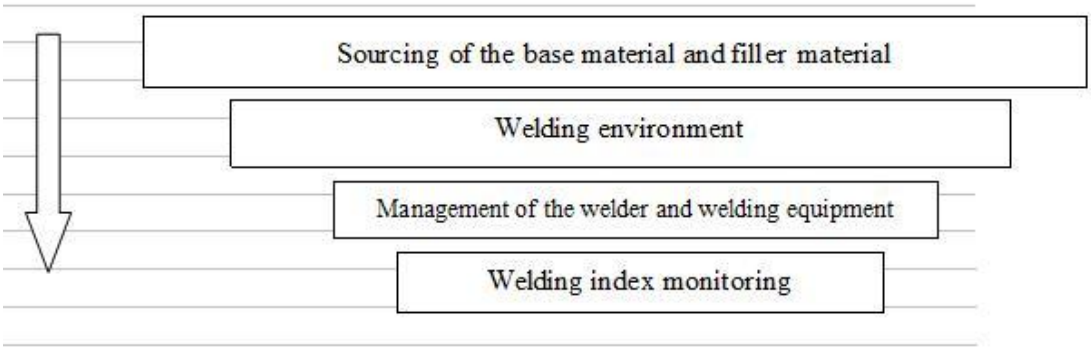

Figure 11. Monitoring for whole procedures

Establishment the perspective during welding quality management and inspection[15]

Welding inspection should be run through the whole process of production. From the view of whole process welding quality management, every people must clear three basic perspectives as following, and make those to guide the welding inspection work(See in Fig.12).

(1) The next working operation is just to customer, servicing for customer, customer first. The company should establish the perspective of responsibility for the user during for the whole manufacturing processes. The staff in each chain should have the stand point that the next process is their customers or users. They are in the responsibility for the next process. The upper process makes sure of the quality for the next process. It can make the quality problems stop in each chain of the process, can not impact the next one.[16]

(2) Prevention-oriented, combination of prevention and inspection. The fine welding structure is mainly dependent on the design and manufacture, rather than relaying on the inspection. Prevention is the main part of the management, and prevention first. However, the inspection work can not relax. Inspection work is an indispensable component of the total quality management. In different production processes, combination of prevention and inspection can be working in the production quality.[17]

(3) Inspection is each employee's responsibility in the enterprise. Total production quality is

build up by each employee's working quality's situation. Each employee should work efficiently under the procedures and then reach the product quality standard. They can make sure the high quality by fine production quality.[17]

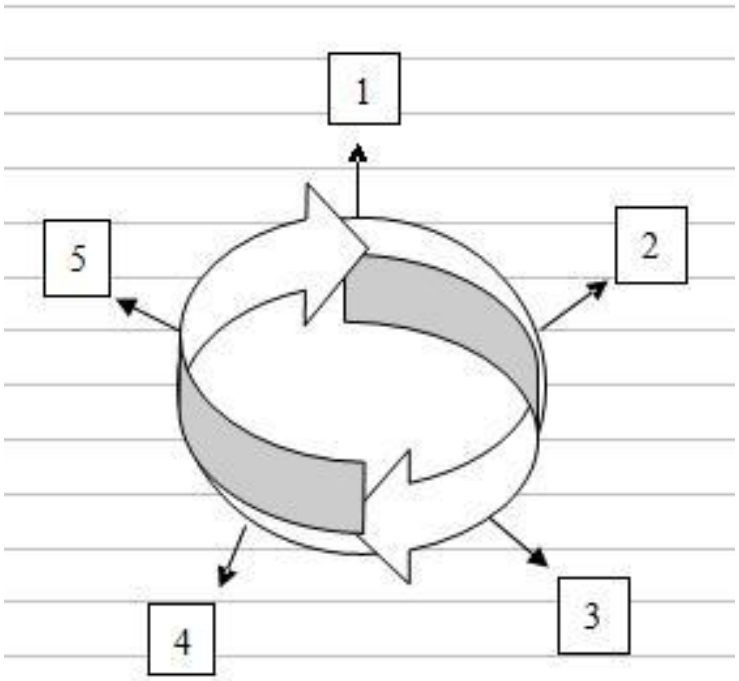

Figure 12. The processes of quality control

1-Design, 2-Technical procedure, 3-Manufacturing, 4-Inspection and Testing, 5-g) Safety

During quality control process, every department should pay more attention on each field. And they should strengthen the co-operation ability, each de has collaboration with previous and next one. From the view of comprehensive analysis, they can solve the problems what happened in the working processes with more effectively(See in Fig. 13). Perform their own duties, that is core idea of the report.[18]

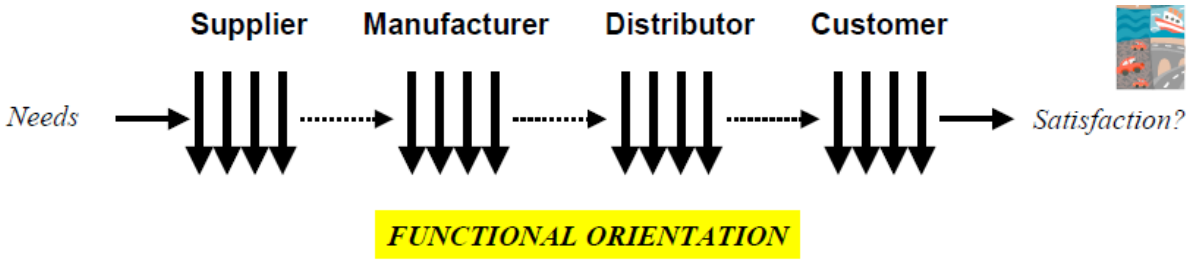

Figure 13. Perform their own duties[5]

The executives must have the idea of planning as a whole. When they receive the report of problem, they must positively coordinate relevant departments to solve it. Then they must summarize the reasons why the problem happened, and make the relevant departments paying more attention on it, make sure they avoid the problems happened next time(See in Fig. 14).[19]

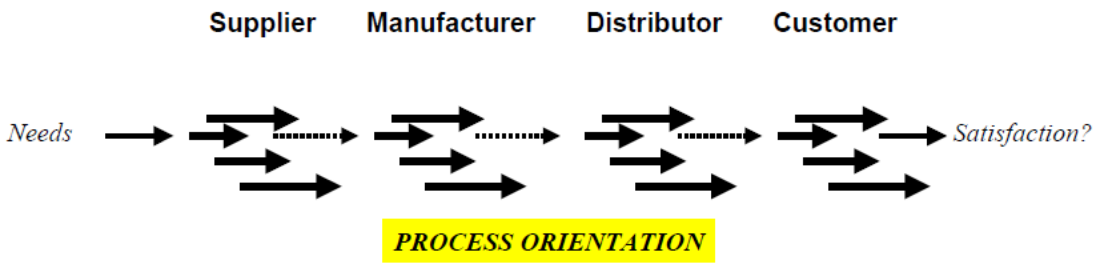

Figure 14. Plan as a whole[5]

For each departments, before performing their own duties, they must know what are the important factors of welding quality. And then they can achieve good enough welding quality, during attaching importance to the factors of welding quality. The factors of how to achieve good enough welding quality are shown in the Appendix I.

4. THEORY OF PDCA

The operating of total quality management activities can not leave management cycle rolling. Promoting and solving quality problems should carry out the PDCA cycle(See in Fig. 15). Whatever improving quality or decreasing substandard products, it should set up the proposed target(what the quality should extent, how many rate of unqualified products should reduce?). After setting up the plan, the coordinator should make the regular inspection work. During the inspection process, we can know that it achieves the desired results or not. We can find the problems and reasons. Then we can set up new standard by the old experience.[20]

The concept of PDCA is a important part of the project. If the total welding quality management is the x-axis, the PDCA is the y-axis. The inspector would make the real-time monitoring during the whole process. We can find the defects in every part of the welding process in time, and we also can correct them in time. PDCA (plan-do-check-act) is an iterative four-step problem-solving process typically used in business process improvement. It is also known as the Deming cycle, Shewhart cycle, Deming wheel, or plan-do-study-act.[20]

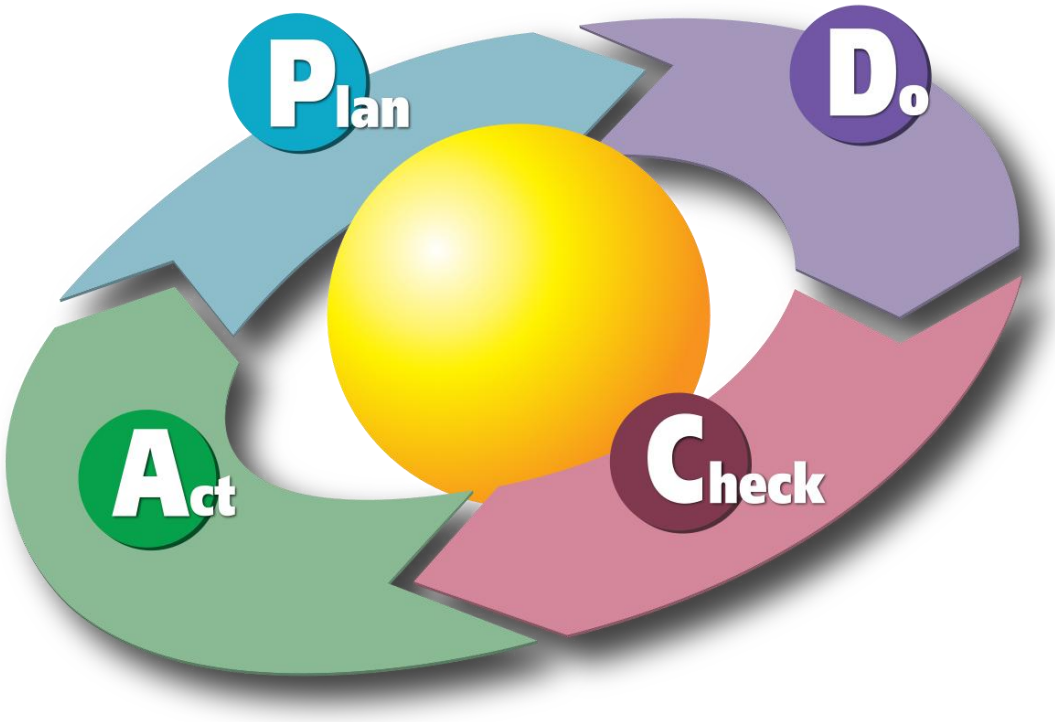

Figure 15 The theory of PDCA[20]

1) **PLAN**

Establish the objectives and processes necessary to deliver results in accordance with the expected output. By making the expected output the focus, it differs from other techniques in that the completeness and accuracy of the specification is also part of the improvement.

2) **DO**

Implement the new processes. Often on a small scale if possible.

3) **CHECK**

Measure the new processes and compare the results against the expected results to ascertain any differences.

4) **ACT**

Analyze the differences to determine their cause. Each will be part of either one or more of the P-D-C-A steps. Determine where to apply changes that will include improvement. When a

pass through these four steps does not result in the need to improve, refine the scope to which PDCA is applied until there is a plan that involves improvement.

PDCA was made popular by Dr. W. Edwards Deming, who is considered by many to be the father of modern quality control. However, it was always referred to by him as the "Shewhart cycle." Later in Deming's career, he modified PDCA to "Plan, Do, Study, Act" (PDSA) so as to better describe his recommendations.[20]

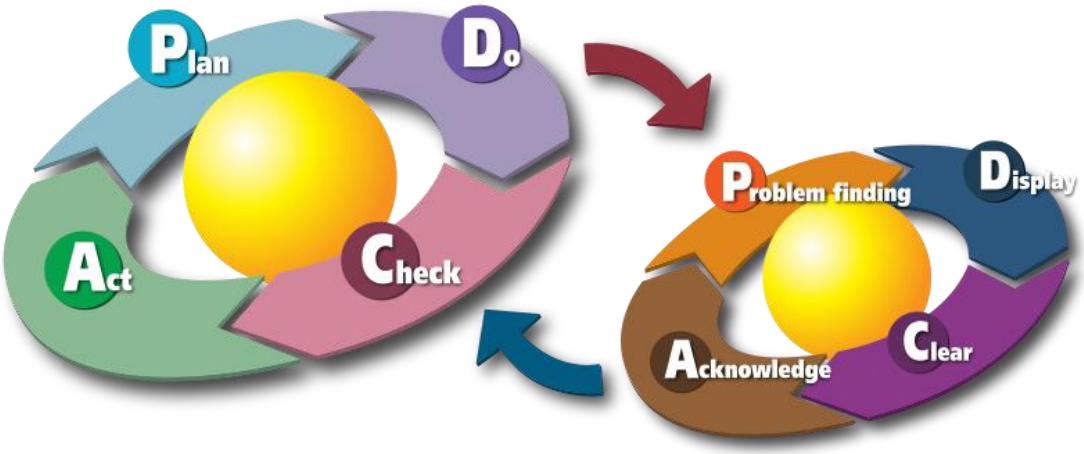

Figure 16. Concepts combination between total welding management and PDCA[20]

The concept of PDCA is based on the scientific method, as developed from the work of Francis Bacon. The scientific method can be written as "hypothesis" - "experiment" - "evaluation" or plan, do, and check. The charts described manufacture under "control" - under statistical control - as a three step process of specification, production, and inspection. He also specifically related this to the scientific method of hypothesis, experiment, and evaluation. Shewhart says that the statistician "must help to change the demand [for goods] by showing how to close up the tolerance range and to improve the quality of goods." Clearly, Shewhart intended the analyst to take action based on the conclusions of the evaluation. According to Deming during his lectures in Japan in the early 1950's the Japanese participants shortened the steps to the now traditional plan, do, check, act. Deming preferred plan, do, study, act because "study" has connotations in English closer to Shewhart's intent than "check."[20]

5. STANDARD QUALITY REQUIREMENTS(SFS-EN ISO 3834-3)

The manufacturer shall review the contractual requirements and any other requirements, together with any technical data provided by the purchaser or in-house data when the construction is designed by the manufacturer. The manufacturer shall establish that all information necessary to carry out the manufacturing operations is complete and available prior to the commencement of the work. The manufacturer shall affirm its capacity to meet all requirements and shall ensure adequate planning of all quality-related activities.

The review of requirements is carried out by the manufacturer to verify that the work content is within its capacity to perform, that sufficient resources are available to achieve delivery schedules and that documentation is clear and unambiguous. The manufacturer shall ensure that any variations between the contract and any previous quotation are identified and the purchaser notified of any programme, cost or engineering changes that may result.

In the part of ISO 3834-3, it defines the standard quality requirements for fusion welding of metallic materials both in workshops and at field installation sites. It describes the aspects of sub-contracting, welding personnel, inspection and testing personnel, equipments, welding and related activities, storage and handling welding consumables, storage of parent materials, post-weld heat treatment, inspection and testing, non-conformance and corrective actions, calibration and validation of measuring, inspection and testing equipment, identification and traceability, quality records. See the details in SFS-EN ISO 3834-3.[21]

6. TRAINING AND ASSESSMENT OF WELDER AND INSPECTOR

According to total welding management, training and assessment of welder and inspector are very important parts in the project. The sickness of welders seriously affects the quality of welding products. The healthier the welders are, the less welding defects exist. Improving welders' ability fundamentally improves the quality of welding.

The inspector is the main gate-keeper for the whole welding process. A guarantee for the final quality of welding products has been provided by finding welding defects accurately and in time. The inspector collects the first-hand information of welding product's defects for establishing information database. It can provide a theoretical basis for avoidance and solving for the future occurrence of similar problems. Depending to the defects of welding product, they could infer probable cause of the problem. The inspector may make the recommendations of maintenance of welding machine, operating during welding process, etc. This can prevent the problems beforehand.

6.1 Training and testing for welder

Based on the actual situation of the subcontractors in China, every welder of subcontractors who are working for the ABB company should have the Chinese welding operating certificate. The testing for the welders of subcontractors what we are referring is based on the Chinese welding test and also accepted by the ABB company. Because of those reasons, the welders of the subcontractors should concentrate to learn the essential parts of knowledge of welding,

which are necessary in their daily welding work.

6.1.1 Training for welder

The welders should concentrate in the welding learning on essential parts. I suggest that the welders should select two parts for targeted training: safety and WPS . This is our primary goal at this stage.

6.1.1.1 Weld symbols(WPS reading)

The British standard for weld symbols is presented in BS EN 22553. When identification of the weld process is required as part of the weld symbol, the relevant weld process code is listed in BS EN ISO 4063(See in Fig. 17 and 18).[22]

The basic weld symbols include:

1) An arrow line

2) A reference line

3) A symbol

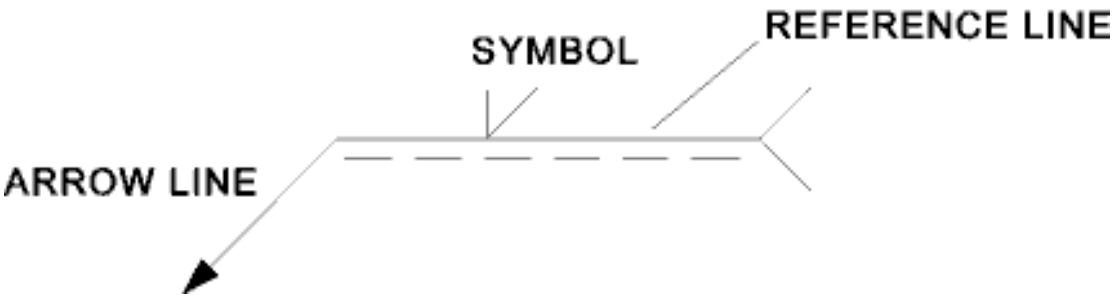

Figure 17. The contents of weld symbol[22]

Note: Weld symbols on the full reference line relates to welds on the near side of the plate being welded. Weld symbols on the dashed line relates to weld on the far side of the plate. If the welds are symmetrical on both sides of the plate the dashed line is omitted. If the dashed line is above the full line then the symbol for the nearside weld is drawn below the reference line and the symbol for the farside weld is above the dashed line.

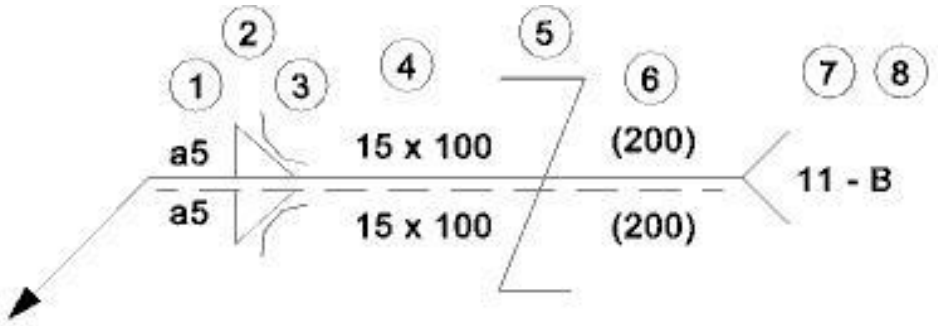

Figure 18. Detailed symbolic representation[22]

Information above reference line identifies weld on same side as symbolic representation. Information below reference line identifies weld on opposite side to symbolic representation(See in Fig. 19).

1) **Dimension referring to cross section of weld**
2) **Weld symbol**
3) **Supplementary symbol**
4) **Number of weld elements x length of weld element**
5) **Symbol for staggered intermittent weld**
6) **Distance between weld elements**
7) **Welding process reference**
8) **Welding class**

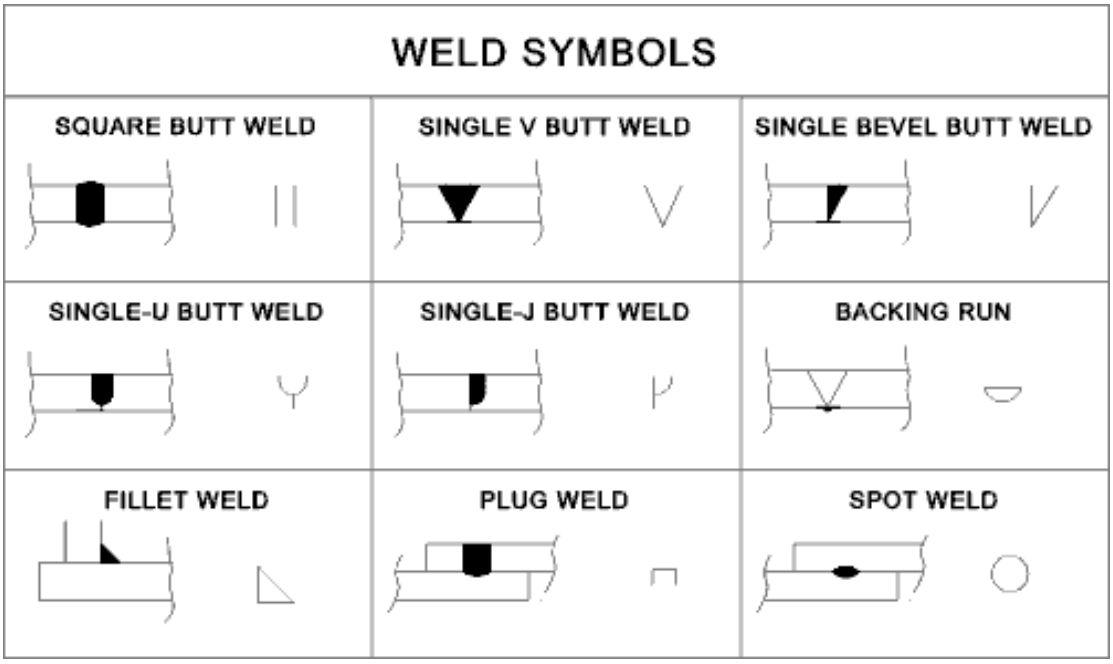

Figure 19. The table of weld symbols[22]

The weld symbols below are used in addition to the primary weld symbols as shown in Fig.20. They are not used on their own.

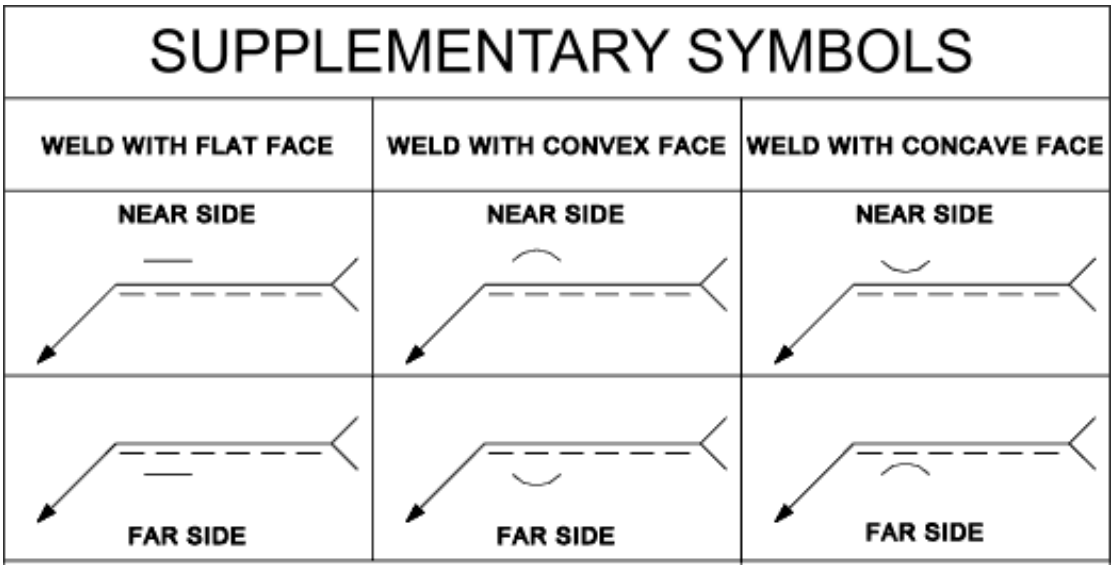

Figure 20. Supplementary Symbols[22]

In Fig. 21 and 22, there are examples of the application of this symbol.

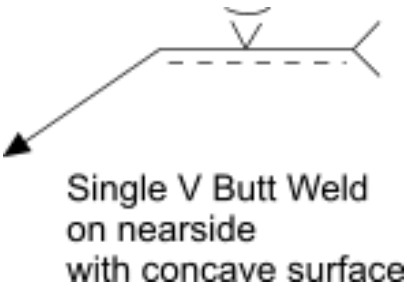

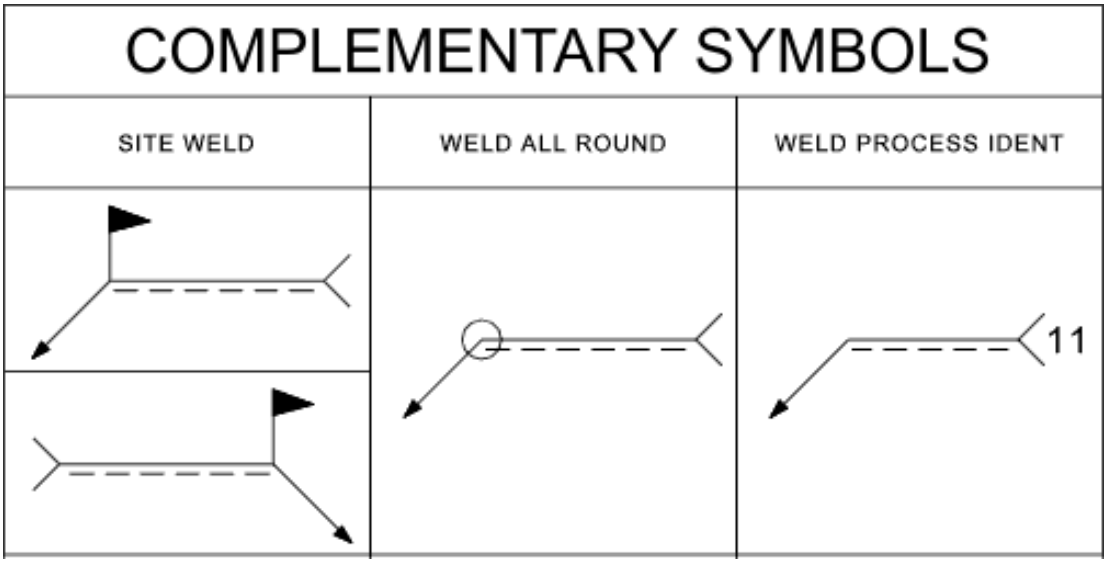

Figure 21. Complementary Indication[22]

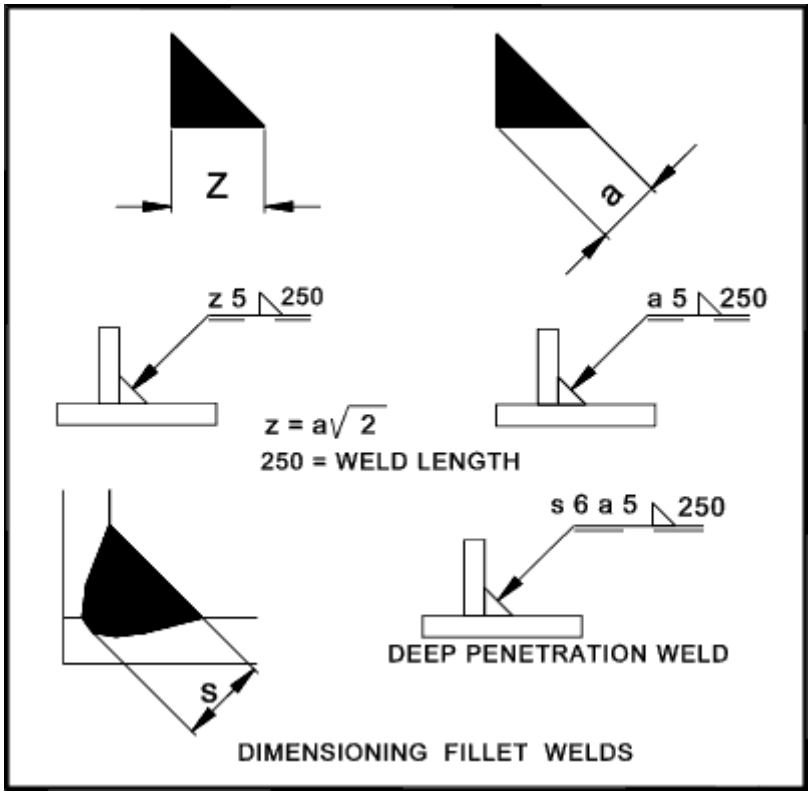

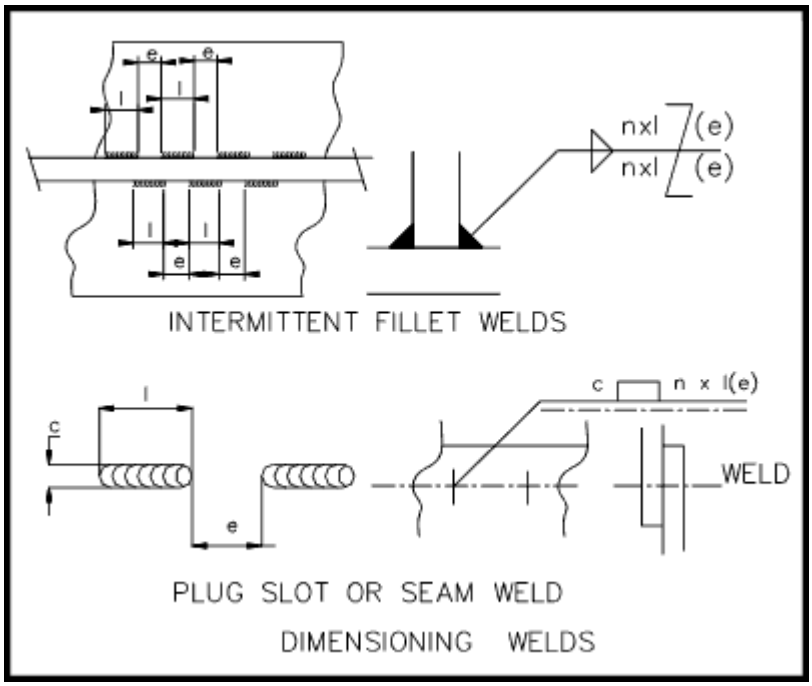

Figure 22. Dimensioning Welds[22]

6.1.1.2 Establishment of safety conscious

Welding operation is categorized to be a special operation. Welding process is not only harmful for the operators, but also significant security risks exist. For the safety during the welding operation and avoiding accidents, China already made safe production standard (GB/T 9448-1999) for welding operation. In the GB/T 9448-1999, it defines the safe operation even its details. In this thesis, the situation of China and the safety standard for the current situation are considered.[19]

A. Protective measures to prevent electric shock

The following measures need to be considered to prevent the electric shocks:

(1) During MIG welding, the welders strictly forbid doing welding operation and operating welding machines without safety training and certificates.

(2) Related personnel must do the regular repair and maintenance. The faulty welding machines are not allowed to run..

(3) An independent electrical control box for the welding machine must be set up.. It includes an overload switch, an automatic no-load switch, fuses, an earth leakage protection devices, etc.

(4) When an electrical malfunction happens, the machine must be repaired by a professional person under power-cutting situation. When the welders switch off power supply, they should wear insulated gloves which are longer than 300mm, and not face the power switch.

(5) The shell of welding machine or electrical control box must be connected with earth leakage protection devices.

(6) When the welders change the filler material, the welders must wear insulated gloves. The insulated gloves should be dry and insulated enough. In the metal structure or the wet working environment, the welders should wear insulated shoes which are over 5000 V insulation class. When there is water on the ground, the welders should wear insulated shoes which are over 6000 V insulation class. They should put insulation rubber mat on the floor. The welders must

not touch the welding parts by any part of body.

(7) If the light of work plant is inadequate, the separate work lights must be fixed in the work plant. The voltage of this work lights should be under 36 V, and under 12 V in wet surrounding situation.

(8) The power supply cable of the welding machine should be 2-3 m. In the special case, when the power supply cable longer is needed, the power supply cable should be fixed on the wall and covered by the insulated material. The power supply cable should be 2.5 m above the floor.

(9) The welding machine should have an individual power supply and the individual power supply's capacity should be matched with welding machine. When the welding machine is over-load, the power load could cut off automatically. It is forbidden to use individual power supply by more than one welding machine.

(10) The cable of grounding device should be the whole cable and can not connect by two. The resistance of grounding device should be under 4Ω ($R_{\alpha} < 4\ \Omega$). The cross-section of the cable should be over $2.5mm^2$.

(11) The cable's resistance (Insulation class) should be over 1 MΩ. When the cover of the cable is damaged, it must be patched immediately.

(12) The gas preheater device's voltage should be under 36 V. When the welding work is over, the gas preheater and gas bottles must be switched off.

B. The harmful factors in environment during MIG welding operation

During MIG welding processsome harmful gases as carbon monoxide, carbon dioxide, ozone, etc are can be formed under high temperature of arc and strong ultraviolet light(See in Fig. 23),

(1) Carbon monokide (CO)

During the process of MIG welding carbon monoxide can be produced. It is produced by two ways.. Firstly, CO_2 decomposes and produces CO by the high temperature of arc. Secondly,

because of the reaction between CO_2 and melded metal elements, the CO is produced. The reaction's details are shown as follow:

$$CO_2 \xrightarrow{\text{High temperature}} CO + O \quad (1)$$

$$Fe + CO_2 \longrightarrow FeO + CO \quad (2)$$

$$Si + 2CO_2 \longrightarrow SiO_2 + 2CO \quad (3)$$

$$Mn + CO_2 \longrightarrow MnO + CO \quad (4)$$

Figure 23. Produce of the harmful gases

In accordance with international standards, the maximum allowable concentration of CO is 30 mg/m^3. CO is lighter than O_2, so it is mainly distributed in the top space of work plant.[17]

(2) Carbon dioxide (CO_2)

CO_2 gas is the protection gas for the MIG welding. In accordance with international standards, the maximum allowable concentration of CO_2 is 9000 mg/m^3, but in the China, there is no specified maximum allowance. The density of CO_2 is higher than O_2, so it exists as higher contents in bottom space of work plant.

(3) Ozone (O_3)

The oxygen in the air is excited by ultraviolet, and produces ozone (O_3). Ozone(O_3) is a kind of poisonous light-blue gas. The maximum allowable concentration of Ozone (O_3) is 0.3mg/m^3. It is heavier than O_2, so it exists in higher contents in the bottom space of the work plant.

In the work plant, the distribution of the mixed gases tends to be as the **Fig. 24**:

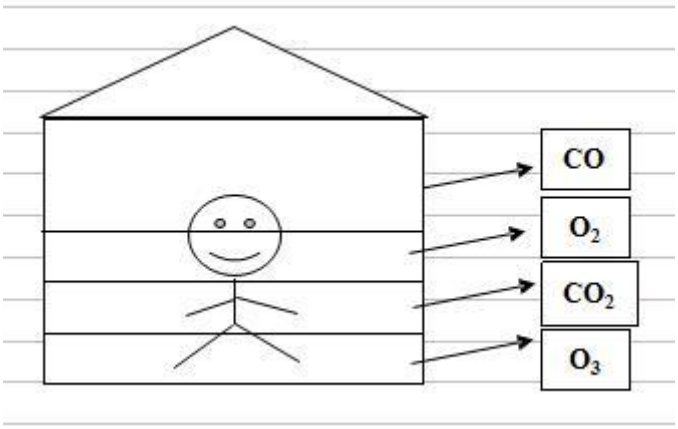

Figure 24. The distribution of the harmful gases

C. Welding dust

The welding dust is included the smoke and dust. The contents of the welding dust are complex. During MIG welding with black metal, the main components of welding dust are the metals of Fe, Si, Mn and their compounds. In MIG welding zone, the melting metal have the reaction with oxygen by the energy of power input. Because of the contents of welding dust complex, it diffuses to the work plant in the form of mixed gases. According to the different base and filler materials, the harmful components can vary(See in Tab 2). [17]

Table 2. The main harmful component with different filler materials[19]

Filler materials	Quantity of dust	Main harmful component	Remark
Flux-cored wire	11-13	Mn	The quantity of dust has nothing to do with welding current.
Solid wire	8	Mn	

D. Arc radiation

In the process of MIG welding, on the one hand, the arc produces high energy. On the other hand, it produces arc radiation. The arc radiation which is produced by MIG welding is 2-3 times stronger than the one which is produced by manual metal arc welding. When the arc radiation acts on the human body, the thermal effects, photochemical effects and ionization effects are harmful for the human.

6.1.2 Testing for welder

The human factor is very important in any part of the welding process. We must have sufficient understanding of the welders who work for ABB company. This means preparations how to improve the welding quality to the certain extent what we need to achieve.

The welding test pieces' sample is shown in **Fig. 25**:

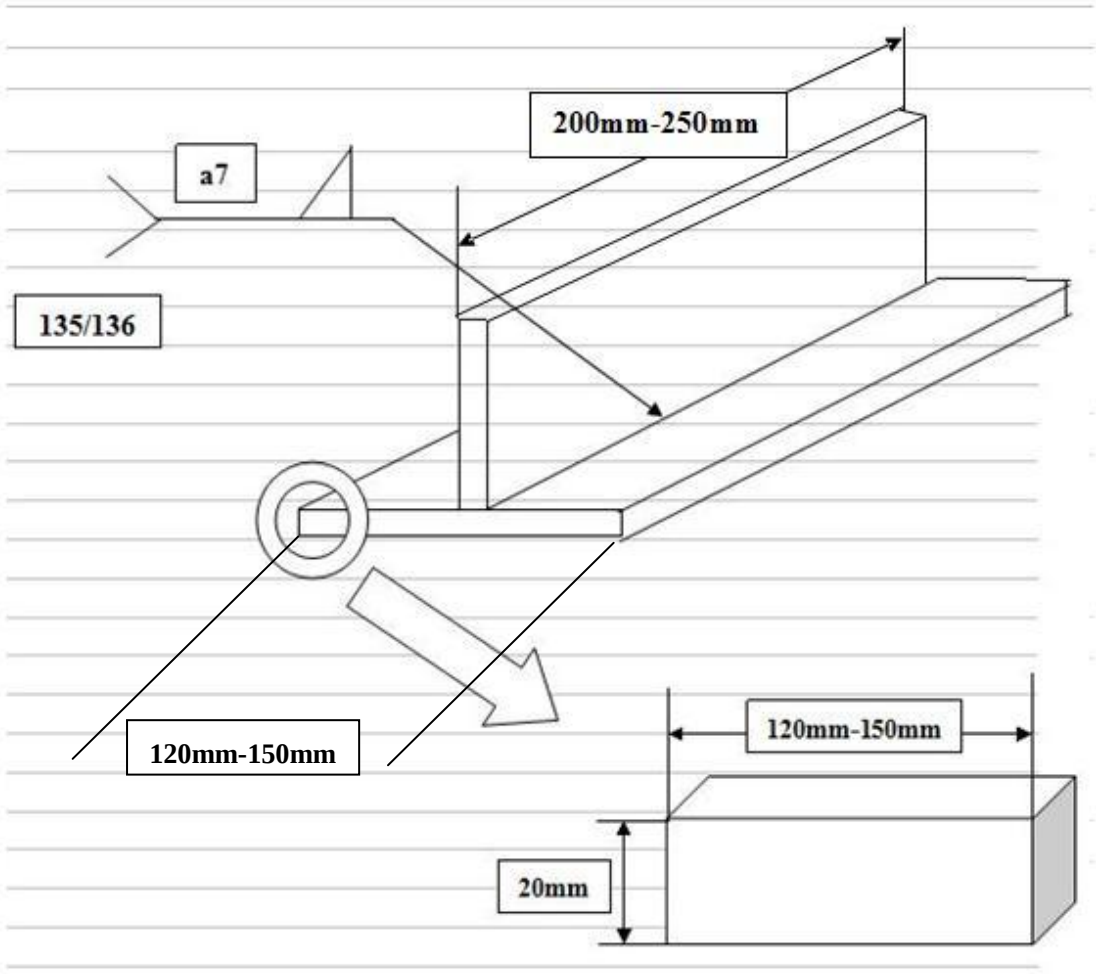

Figure 25. Welding test pieces sample

The welding positions are shown in **Figs 26 and 27**:

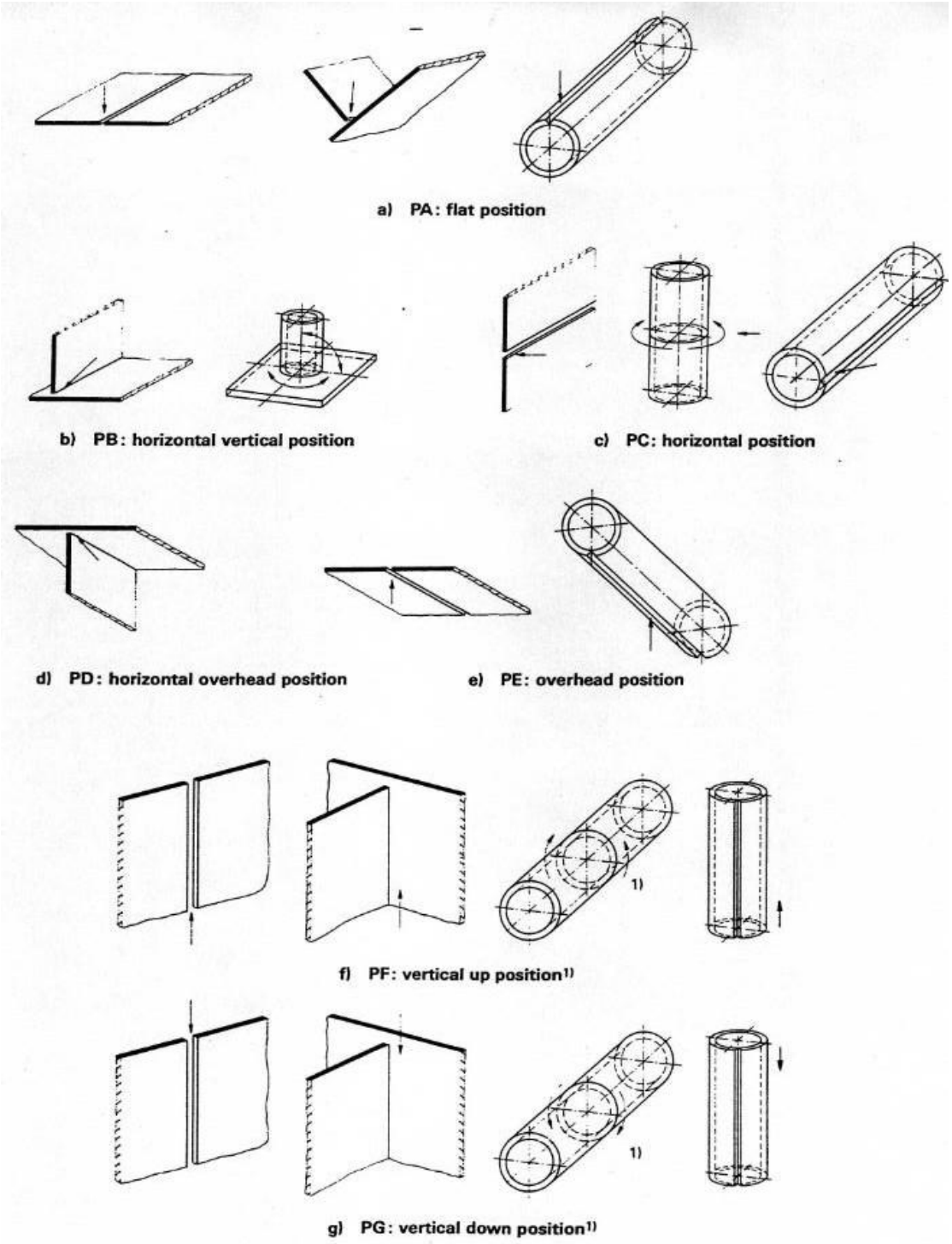

Figure 26. Welding positions[21]

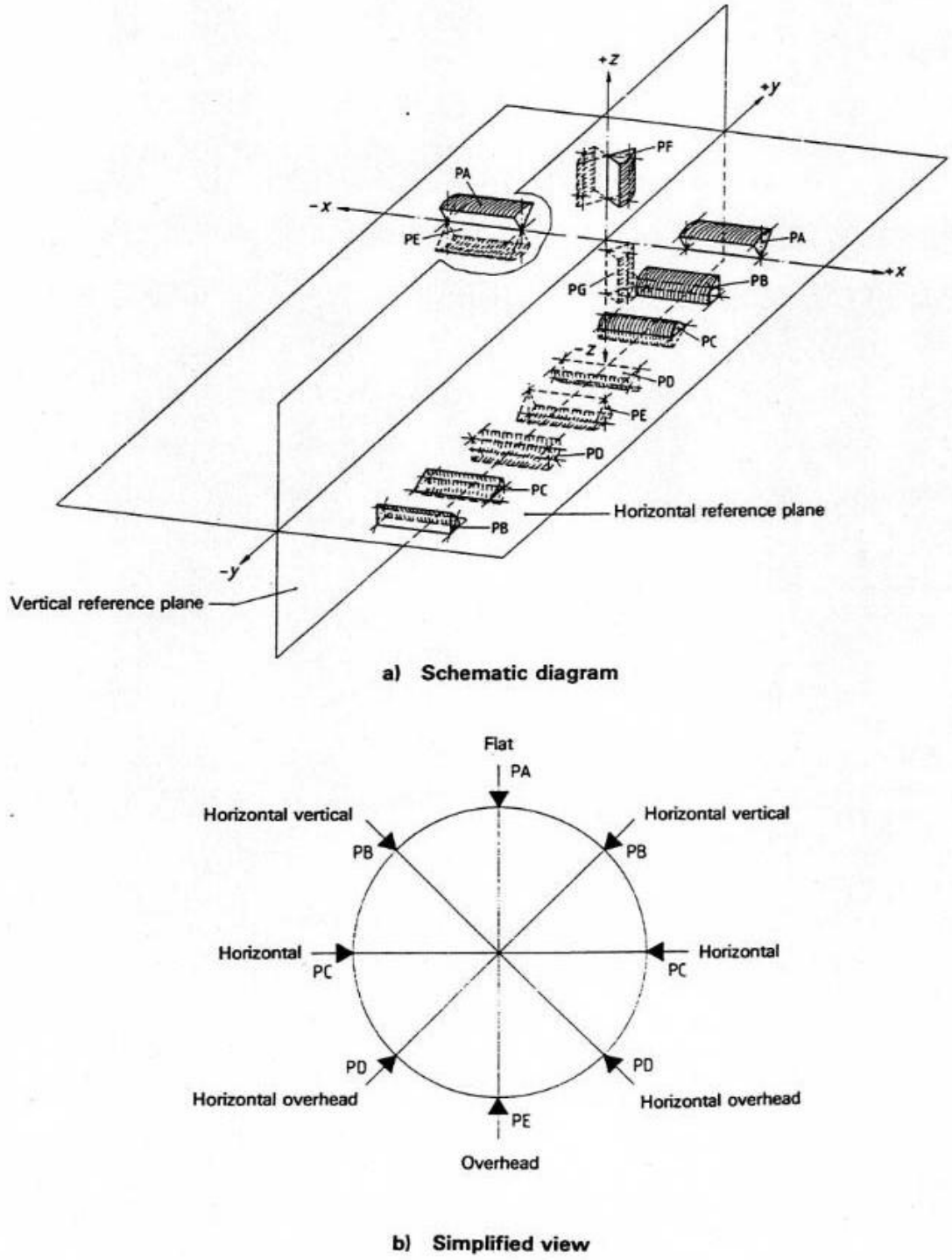

Figure 27. Welding positions schematic diagram[21]

Test for the welders

All welders have the test with two test steel plate pieces(See in Fig. 28). Before testing, all welders can practise test-welding. When they are prepared enough for the real test, they just

can start the test. Then the examiner will evaluate the test and give the corresponding level to the welders who have the welding test. The following name-list and welding test sample pieces in the appendix II are the history record of test in 14.05.2009. Those data and experience can be the reference for the test in the future(See in the appendix II)

Figure 28. Welding test pieces sample

6.2 Training and testing for inspector

By the limits of the present situation and the restriction condition, the ABB company does not have the qualification and ability to award the IWI certificate to the inspectors. Therefore a separate taylor-made training is an essential part of the main work.

The inspectors who are working in the ABB company have the advantage of the combination of theory and practice. They have sufficient chances to see a large number of welding defects. While working to learn, the ABB company's inspectors can collect rich experience about welding inspection. It should be built up by the experience and time collection work.

One part of inspector training describes the main defects of welding product and the main reasons why the welding defects happens. During the inspection work, the inspectors can collect the data and information of the welding defects. It means that the inspectors also can know the main reasons. They can put forward the constructive suggestions and comments for continuous improvement of quality in the future work.[19]

a) Quality

Quality is usually perceived as the application’s ability to fulfill the reasonable expectations and needs set by the end user. Because of the demand by the end user, it can change into special index, and make the product to follow the index.

b) Quality management

Quality management defines the necessary management of functions and activities for making sure or reaching quality requirement. The core of quality management is making the people sure that the products can meet the quality requirements. It also can make the demand-side having enough confidence for the supply-side can supplying the good products which are following the requirement. And the confidence also can make the enterprise sure that they can

supply the satisfying products and go to manufacturing with enough confidence.[18]

The purposes of quality management are as following:

- Decrease production costs
- Ensure final product quality and performance
- Increase product value

c) Welding quality management

Welding quality management defines the enterprise, which does the welding production, efficiently control welding structure quality during playing the quality function in management. Making sure welding quality is not only satisfying the requirement of the joint which is included bevelling, but also ensuring the welding quality management before welding, in welding and after welding processes. This is total welding quality management. The enterprise can output the good quality welding structure only under this management. A perfect quality management system should contain three facts and in order as follow: design, implement and inspection. Considering about management, in the history, most of quality problems occurred by Tab .3

Table 3. The reason analysis of the quality problems[19]

Reason	Factor	%	Remark
Personal mistakes	Personal factor	12	12% quality problems are leaded by personal reason
Inappropriate inspection methods	Quality management factor	10	88% quality problems are leaded by management reason
Technical	Technical management factor	16	
Lack of understanding of new technologies, new material and new procedures		36	
Planning and organization weak	Production management factor	14	
Unknown	Organization management factor	8	
Other		4	

d) Quality assurance

Quality assurance can be divided by two parts, internal quality assurance and external quality assurance. Internal quality assurance is for the purpose that the leaders of enterprise confident the products of the enterprise can satisfy the quality requirements or not. This is a management means in the enterprise, the purpose of it is making the leaders of enterprise know what's what for own product's quality. The external quality assurance is for the demand-side confident that the product quality can satisfy quality requirements. The supply-side should show quality assurance manual, quality record and quality plan, etc.[19]

e) Quality control

Quality control defines the activities of making sure the products satisfying quality requirements. Product quality is achieved in long process as a ring. Every parts of the quality should be under monitoring and controlling. Just under this situation, it can manufacture fine products which are under quality requirements. This is the core of quality control.[19]

6.2.1 Common defects

The international standard ISO 6520-1982 describes the defect levels.. The types of welding defects can be divided to six main types. The welding defects are:[23]

1) **Crack**
2) **Porosity**
3) **Slag**
4) **Penetration**
5) **Welding shape defects**
6) **Other**

Every welding defect can be found in the list in the appendix III.

6.2.2 Common reasons of welding defects

During welding process, because of welding procedure choice, preparation before welding and mishandling, those will produce a variety of welding defects. The common defects are as follow:[24]

1) Welding seam shape does not follow the requirements

It mainly refers to the welding seam too high, too low, too narrow and non-smooth transition phenomenon. The main causes are as follow:

(1) Welding groove inappropriate

(2) Improper filler wire operation

(3) Welding current unstable

(4) Welding speed uneven

(5) Welding arc level changes too much

2) Undercut

It mainly refers to groove and depression on the part of the base material along the welding seam. The main causes are as follow:

(1) Inappropriate choice of procedure parameters, such as over current, arc too long.

(2) The operation is incorrect, such as welding angle incorrect, filler wire operation improper

3) Slag

It mainly refers to residue left in the welding seam after welding operation. The main causes are as follow:

(1) The poor quality of welding material

(2) Current too low, welding speed too high

4) Arc crater

It mainly refers to the crater that happens in the site of stop-arc area. The main cause is as follow:

(1) Arc blow-out too fast during the welding process, and the crater is not filled by the filler material enough.

5) Excess penetration

It mainly refers that the molten filler material outflows from the back side of the welding groove. Then it forms perforation defects. The main causes are as follow:

(1) Welding groove improper, the gap between the base materials is too large

(2) Welding current too high

(3) Welding speed too slow

(4) Poor welding operating skill

6) Porosity

The main courses of porosity are:

(1) Filler wire is not matched with base material

(2) High sulfur content in the base material

(3) Base material contains too much sulfur impurities

(4) Welding current is not matched with travel speed

6.2.3 Building up welding defects data base

In the actual work, the inspectors should collect the defects information and build up the database. The inspectors should record the defects by the inspection record checklist as the actual situation. Finally, they could use the pie chart to analysis distribution of those defects. (See in the appendix IV)

According to welders' experience, most welding defects of welding products should be occupied in the same content of the pie chart. If the some welding defects occupied too much content in the pie chart, it means that we must check corresponding aspects in welding

processes. The pie chart should be as in the appendix IV

The Table 4 shows the history of training of inspectors. The content of the training of inspectors contains most of the part of this part of thesis. It can be the reference material for the future training work.

Table 4. The list of inspectors

NAME	DEPARTMENTS
Lee(Yolanda)	**ABB(QEHS)**
Liu(Nelson)	**ABB(LinGang)**
Liu(Andy)	**ABB(LinGang)**
Zhang(Joe)	**ABB(Sourcing)**
Yu(Simon)	**ABB(Sourcing)**

7. EVALUATION SYSTEM

7.1 Current situation of the subcontractors

Because of the current economical circumstances, more and more companies seek the co-operating partners in China. OEM subcontracting is the most common form of cooperation because of the low initial investments and labor cost. In this case, ABB Company has also made the similar solution. In the same time, the hidden problems, based on e.g.. cultural differences, also jump onto the desktop. The advantages of low costs are not denied, but the production ability of the local suppliers and welders is much lower than that of the similar companies and welders in Finland. The quality of welding and production must be guaranteed. The quality department of ABB cannot inspect the problems from long distance, and the ABB Company cannot correct the quality problems quickly enough, because inspection and correcting period is too long. In this report, some advice and methods for improving the some part of the situation are suggested.

7.2 Present status and current problems

In order to cover the present status of a typical Chinese manufacturing company, a trip to visit two ABB subcontracting companies was made. It was made by staffs from ABB and. Ming Sun on 8.-14.2.2009 to ShangHai, China, to visit the ShenLi and HongYu factory in Shang Hai. During the inspection period, several types of problems were found in the aspects of operating, safety and quality. The status was documented by lots of pictures and introducing personnel.. Back in LUT, the results were consulted with specialists. There where e.g. prof.

Veli Kujanpaa, who gave important suggestions for improvement the quality factor. This statis report is collected from all the observations and recommendations to give the suggestions and advice for the quality improvement in connection with the cases of ShangHai local manufacturer and supplier. It is described by a few separate problems found.

7.2.1 Problem one: Climate conditions

The working plants are not closed shops but open to outside climate. Interior temperature is strongly influenced by the outdoor temperature. Indoor temperature can be - 4°C in wintertime, and even 35°C during the summer.

According to the European welding handbook, the welder should work at 20°C, because the welder cannot concentrate on welding work in high temperature. In winter, the local outdoor temperature will decrease below the freezing point. In this temperature, humidity is formed on the surfaces, which can causes several quality problems, such as cold cracking or porosity.

7.2.2 Problem two: Welders experience and skill level

There are serious doubts in the validity of welding operating certificate.

1 . Because of the historical reasons of China, some of the welders just changed to work the welding field from other occupations. In other words, most of the welders do not have enough training and experience of welding work (working experience two or three years), even if the age of the welders is not young (40 to 50 years old).

Figure 29. Certificates of the welders

2 . In picture 29, we can see another problem, the first awarded time of certificates are totally the same for each other. Except the birthday, name and photo, every data of the certificates are totally the same. Even the first and second check time are the same days. The reliability of welding operating certificates is limited and doubt exists. In the Table 5 the text is translated.

Table 5. Translation of welding certificate in Fig. 29.

First awarded time	**2005.9.6**
Using period	**2005.9.7 to 2011.9.7**
Audit time **First** **Second**	 **2007.7** **2009.9**

7.2.3 Problem three: Welding safety and ergonomic

In Figure 30, a general view of welding environment is shown. There are a lot of misorder and very many possibilities of accidents to happen. In Figure 31, a detail is shown on an

unacceptable ground wire installation. In the field inspection, the safety problems are so particularly prominent.

Figure 30. The environments of the work plant

The worker's safety awareness is extremely weak. If electricity-leakage accidents happen, then the consequence would be unthinkable. When the work plant was inspected, the environment could be described by the word of muzzy In the work plant, the working environment is cluttered. The equipment's cables and pipes are all-round on the floor. There are lots of mass which have non-work-related on the ground(See in Fig.31).

Figure 31. Hidden danger of ground wire

7.2.4 Problem four: Welding Procedure Specifications (WPS)

In the factories visited it was found that welders do not follow the requirements of WPS. E.g. according to WPS, in most cases the part must be welded by MIG welding method. But part of welding was made by manual metal arc welding (MMA). The coating of the welding electrodes can be humidified by water(See in Fig.32). Moisture rate of air is very high. In the process of inspection, there is no heating equipment for electrodes to dry them, such as oven. This kind of action could be called serious cheating. ABB must pay more attention to these kind of things.

Figure 32. Stick welding

7.2.5 Problem five: Shielding gases

One of the most unclear topics is the type of shielding gases used(See in Fig. 33). This looks fraud. One of the most unclear topics is the type of shielding gases used. This looks fraud. The inspection methods of ShangHai ABB company are imperfect. The usual way to proceed in inspections by the inspectors of ABB is just to interview the welders of the local supplier. The answer from the suppliers is the final result. During the visit, the inspector of ABB (ShangHai) and Mr. Sun asked three welders of the supplier, which shielding gas was used. They gave three different answers about the shielding gas: CO_2(100%), CO_2(20%)+CH_2(80%) and CO_2(20%)+Ar(80%). It raises the questions about this problem. The main reason not to follow the specifications is the cost: they use the cheaper shielding gas instead of the expensive one, against the WPS.

Figure 33. CO_2 gas delivery receipt

7.2.6 Problem six: Post-weld treatments

In the supplier's production flow, the processes of heat treatment and painting are of course after the inspection, because heat treatment is made to retain the properties lost during welding. However, there is a serious doubt that in practice welding is often made only after the heat treatment and painting(See in Fig. 34). The production processes should follow the production flow chart strictly. Because the order is upside down, serious problems happen.

Figure 34. The factor of surface treatment

The production process should be as see in Fig. 35:

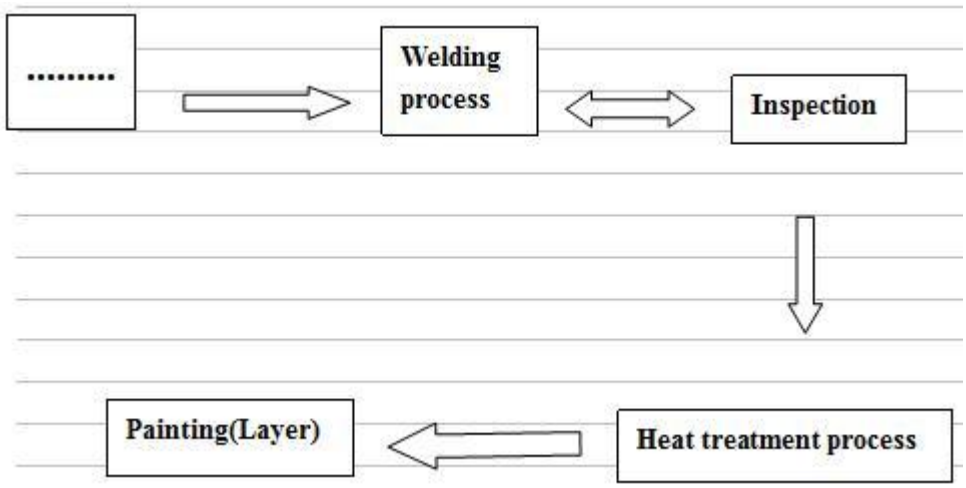

Figure 35. Production flow chart

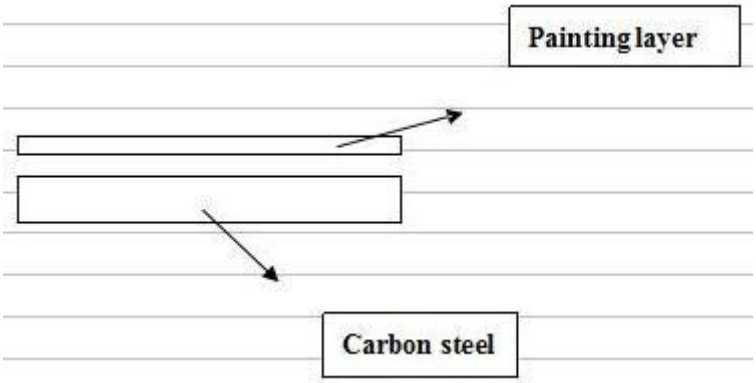

Figure 36. The common situation of the base material

Painting layer increases the degree of insulation, which disturbs the welding process. In this kind of working condition, it can not assure the welding quality, so these reasons make the results**(See in Fig. 36).**

7.2.7 Problem seven: Cracking

During the inspection, cracks could be revealed, Fig. 37. This can be caused by the dirty and corroded surfaces which are not cleaned before welding and also partly because of high humidity(See in Fig.37). (see problem 1)

Figure 37. Cold crack

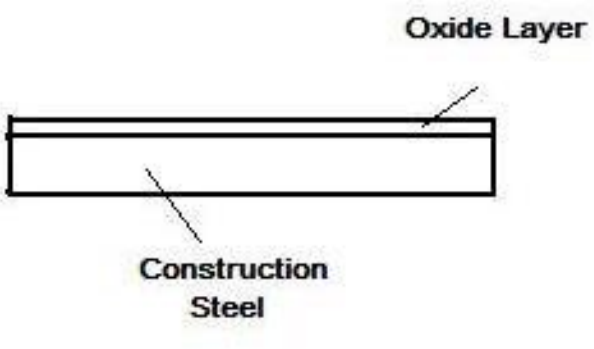

Figure 38. Pretreatment for the base material

7.2.8 Problem eight: Welding angle

There is a lot of quality problems happened because of the wrong welding angle(See in Fig. 39 and 40). This is coupled to the problems of not following the WPS and problems of training (problems 2 and 4). In the wrong welding angle, the filler material is melted on one side of the base material. The weld is formed only partly and penetration is not deep enough.

Figure 39. Quality problem because of welding angle

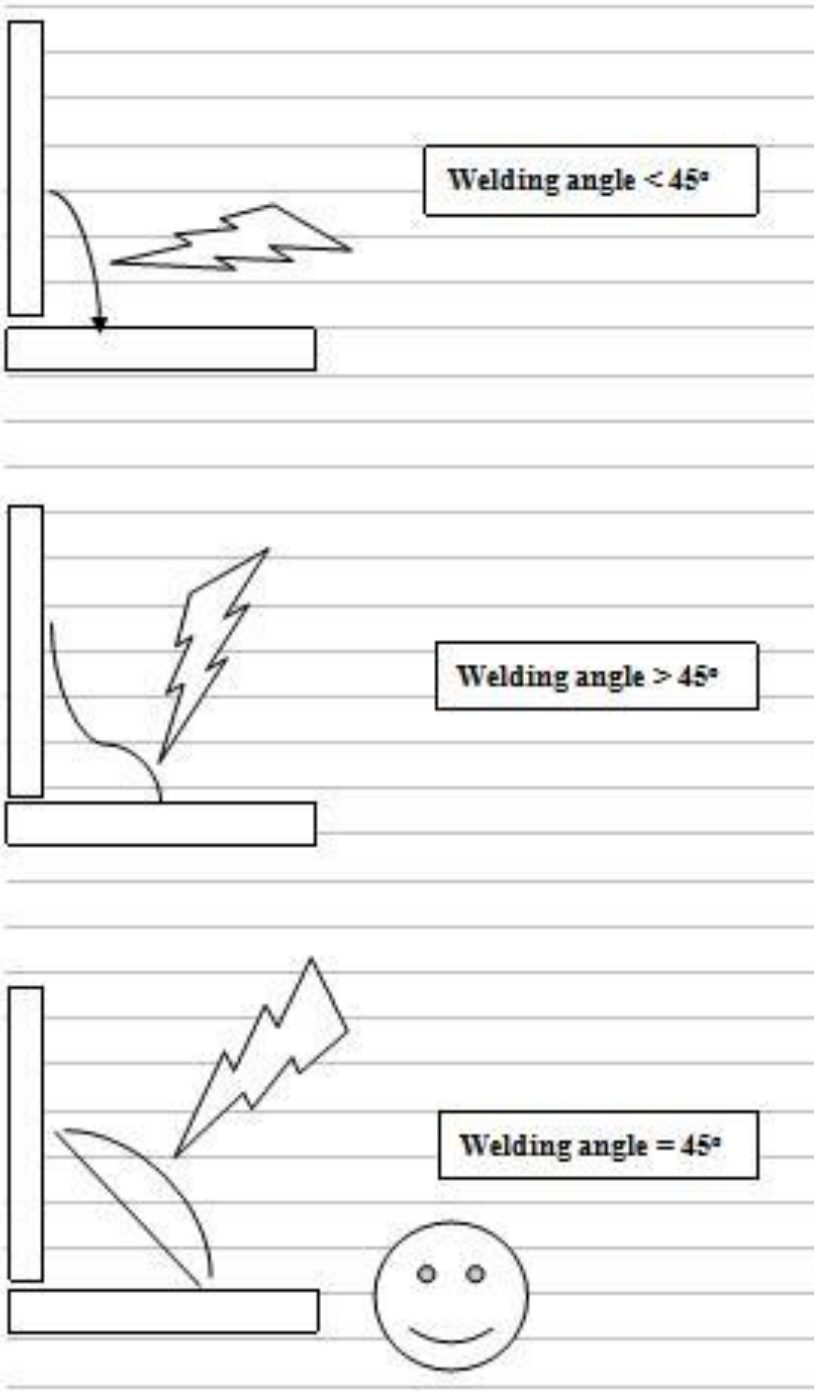

Figure 40. The choice of suitable position

7.2.9 Problem nine: Over polishing work

There are problems of polishing the surface of the welding beam. The grinding will take off

the 1/4 to 1/3 of the welded material. In the work plant, the inspector just can judge the quality of the working parts with the naked eye. The supplier grinds off so much of the welded material surface intentionally or unintentionally. To some extent, it hides the real welded surface and its quality. The inspector cannot get the real information from this kind of welded surface. As can be seen from the above Fig. 41, the porosity, hot crack and crater totally are hidden after this process.

Figure 41. Polishing or grinding problems

The suppliers have a misunderstanding of the excellent welding quality standard. The supplier thinks that if the surface is perfect, the quality is perfect. This kind of surface is hiding lots of the quality problems. This method is the approach for passing the inspection.

In the welding process, the welders, for avoiding the quality problems (cracking, crater and porosity), just weld more filler material on the base material. For example, the requirement for the “A diameter” is 6mm. The welder will do the work and make the “A diameter” to be 8mm, Fig. 42. Then the welders grind much of the material from the welding beam by grinding equipments. After this process, it looks like no quality problems happened for this part. In another word, this is a cheating act. The ABB Company should treat these questions seriously.

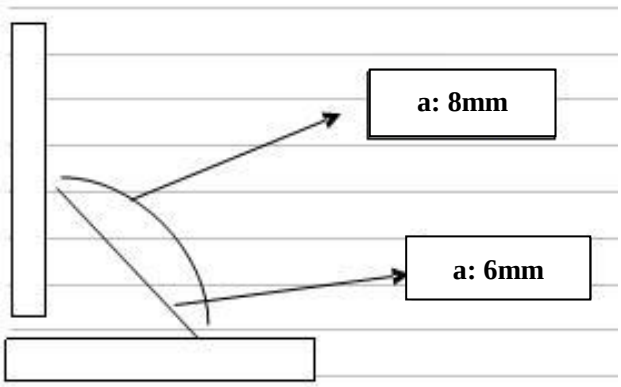

Figure 42. The error handling concept

7.2.10 Problem ten: Accuracy of the welding performance

One example of the accuracy is the barometers. Barometers should be kept in the vertical position. **Figure 43** shows a wrong position. In this case, the barometer can show the right value of the CO_2 pressure, even if the pressure is too low.

Figure 43. Barometer of the MIG gas

As showing from the document in **Fig. 44**, the diameter of the filler material is 4 mm. In the MIG welding, this cannot be the case. The right parameter should be 1.2mm to 1.5mm. It can also show that the welding has been made with MMA method.

Figure 44. Welding document

It is easy to say and hard to do manufacturing good enough quality products, because during the welding processes, there are so many details what are needed to pay more attention. It is hard to avoid omission of some details. We should set up the evaluation system, and the purpose is to put everything into right place by force. This is an indirect coercive measure. At least, in the beginning of carrying out the project, the project should be carried out by force. As time goes, every subcontractors of ABB company would form good habits. This requires the sustained strengthening of the management.

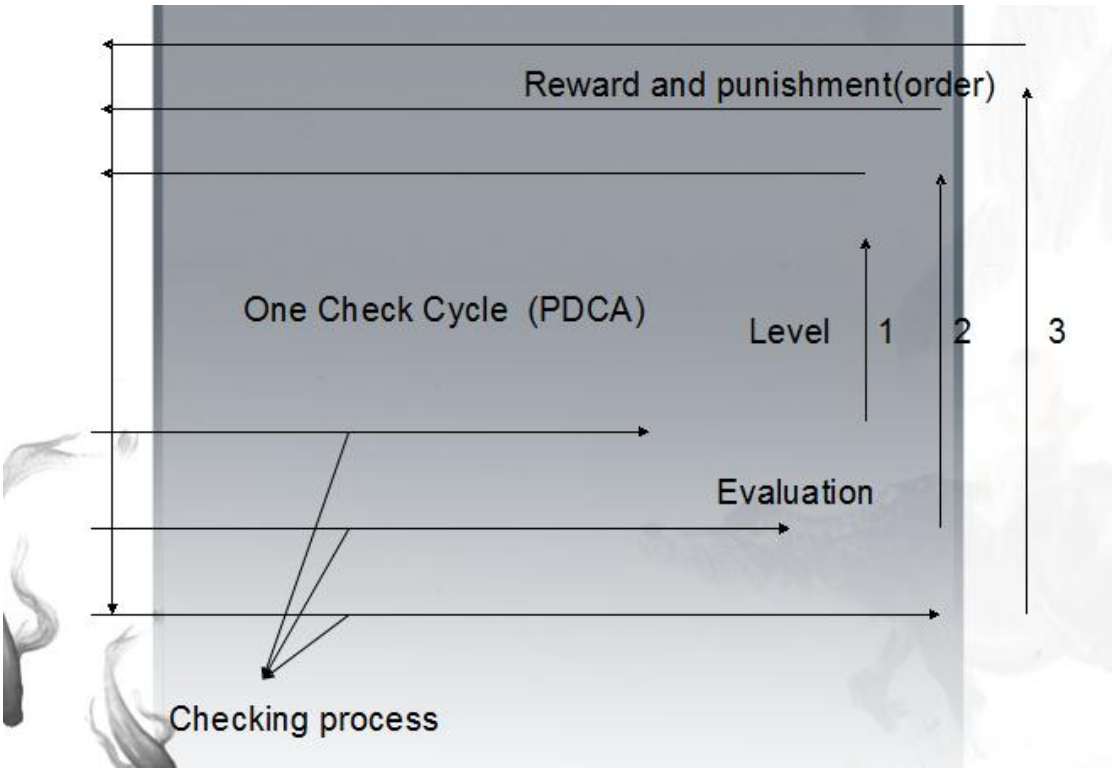

Figure 45. The system and purpose of reward and punishment

The operating flow of evaluation system are:

- Create the welding situation checklists for the subcontractors as seen in the appendix Va –d and to start to update them.(See in the appendix V)
- Let the inspectors of ABB company inspect the situation of subcontractors, and collect the situation and information of them.
- Give the score for the subcontractors.
- Evaluate the level for the subcontractors.(See in the appendix VI)
- Give the reward and punishment to the subcontractors(See in Fig. 45).

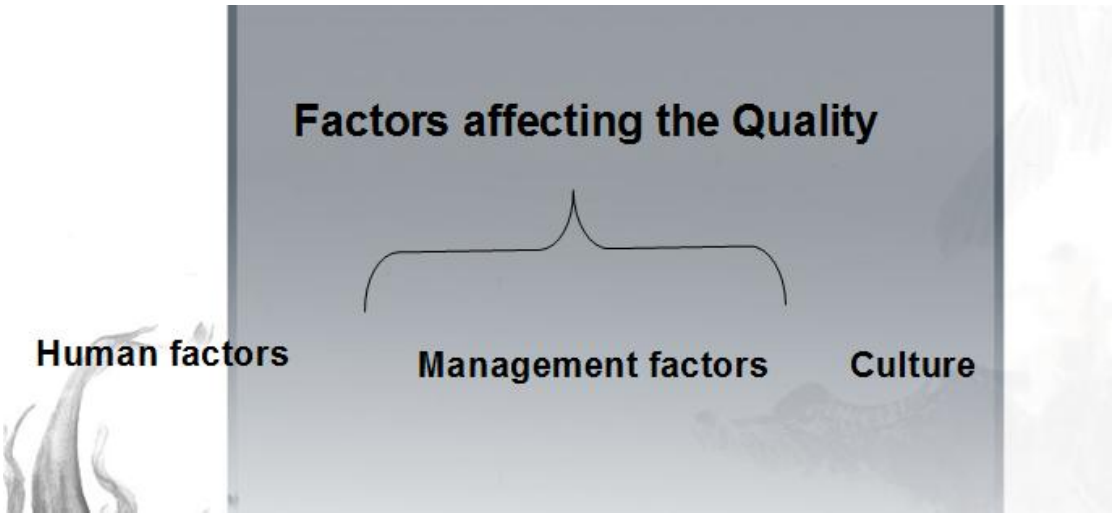

Figure 46. The factors affecting the quality

The purpose of carrying out the evaluation system is strengthening the every management details during the working process. After researching, we found the main reasons that occur those quality problems are based on the three factors: culture, management, human. Improving three factors, it is the fundamental solution(See in Fig. 46).

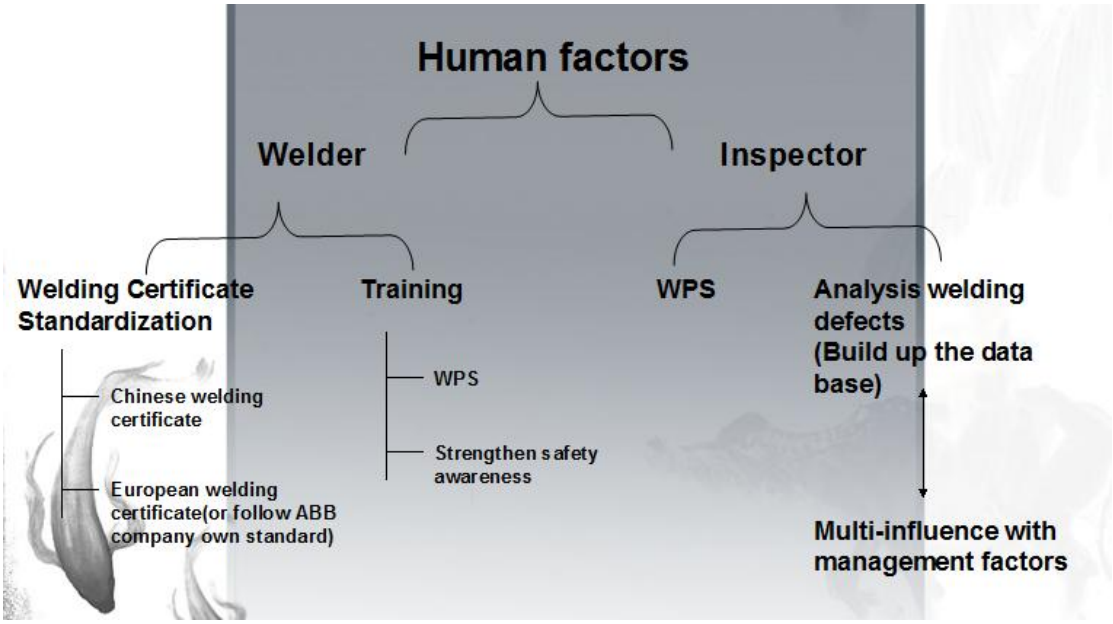

Figure 47. Human factors

Due to the particularity of welding work, it determines the difficulty of welding inspection work for the welding products. As we well know, even there are deficiencies in the work, the

defects of the welding products are not sure appear in the final products. According to the total welding management, the high welding quality must be achieved by the implementer correcting every key point in the welding processes. This is a process of moving from quantitative change to qualitative change. Rome was not built in one day. All of the actual situation facts show in the background part of the thesis, and we can see the critical nature of this work. There are the causes of these problems, because the subcontractors of ABB company(ShangHai) put the cart before the horse and during the working processes they make those processes upside down. Seeing in the Fig. 47 and 48.

In every company and factory, the human factor is key point of them(See in Fig. 47). For our case, improving the welder and inspector's diathesis is the first step of improving welding quality. The good welders can produce the high quality products fundamentally, and the good inspectors can avoid the quality problems happening during the working process, and then they also can collect working information and build up the data base for avoiding the similar problems happened in the future. Totally, both of them can make the work more effective.

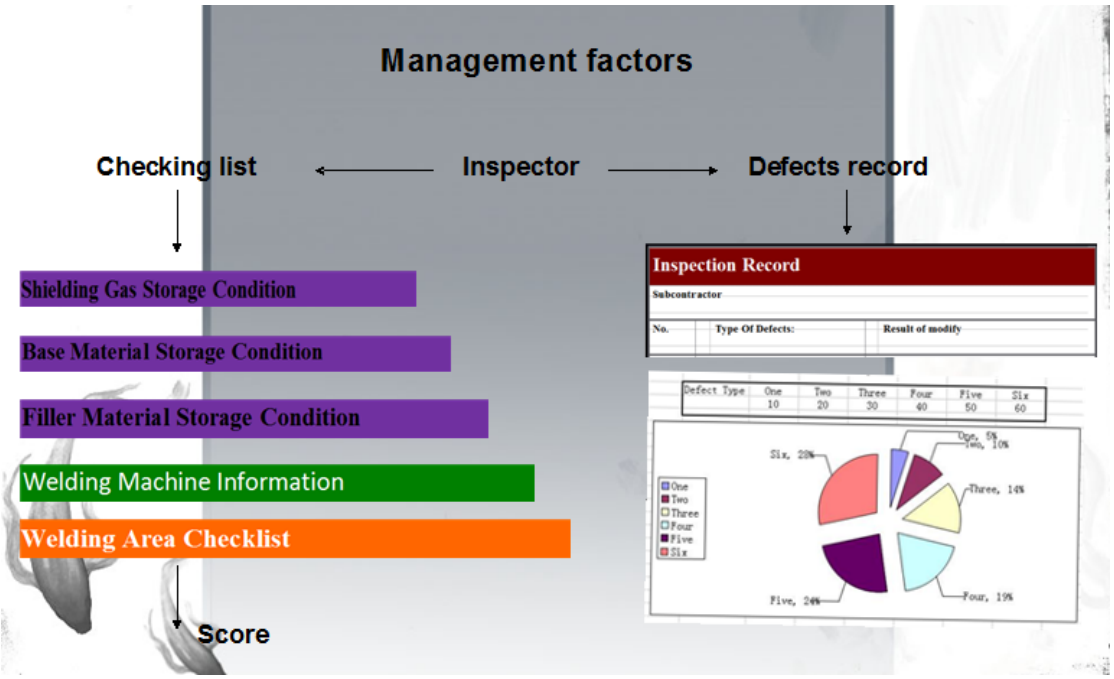

Figure 48. Inspector's main tasks

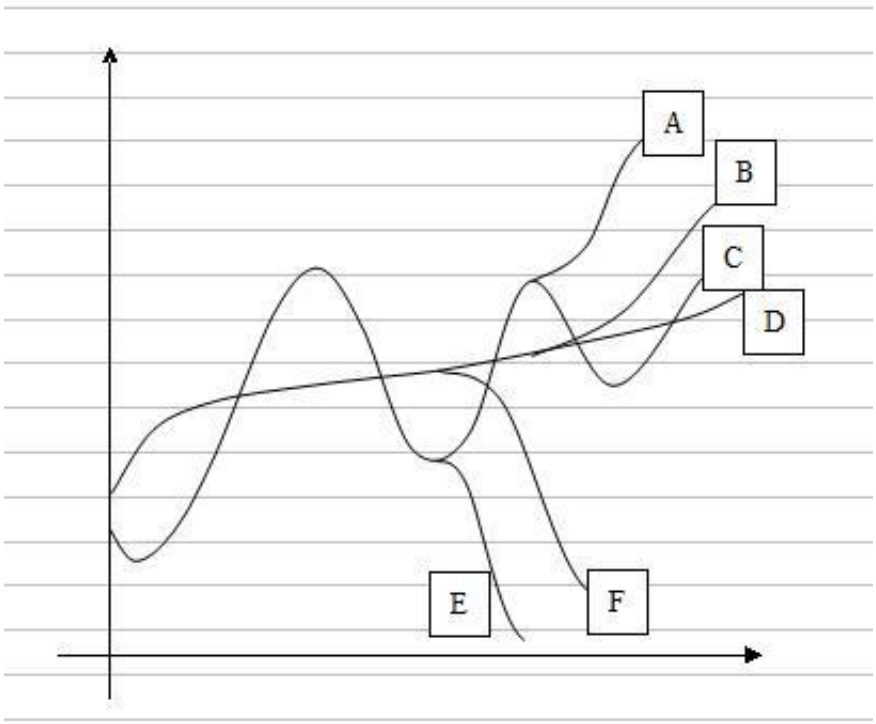

Figure 49. The effort of carrying out the total welding quality management

For the welding quality problem, there is a very long way to go. According to the total welding management, we must ensure every parts of the working chain orderly and correctlly. All things are difficult before they are easy. The checking and inspection work are cumbersome and complex in the beginning of the project. During the the inspection work carrying out, ensuring all of the key points in the working process would become work habits of the subcontractors of the ABB company(ShangHai). Until here, we could achieve the welding quality self-control of the subcontractors of the ABB company(ShangHai).Seeing in the Fig. 49 and 50.

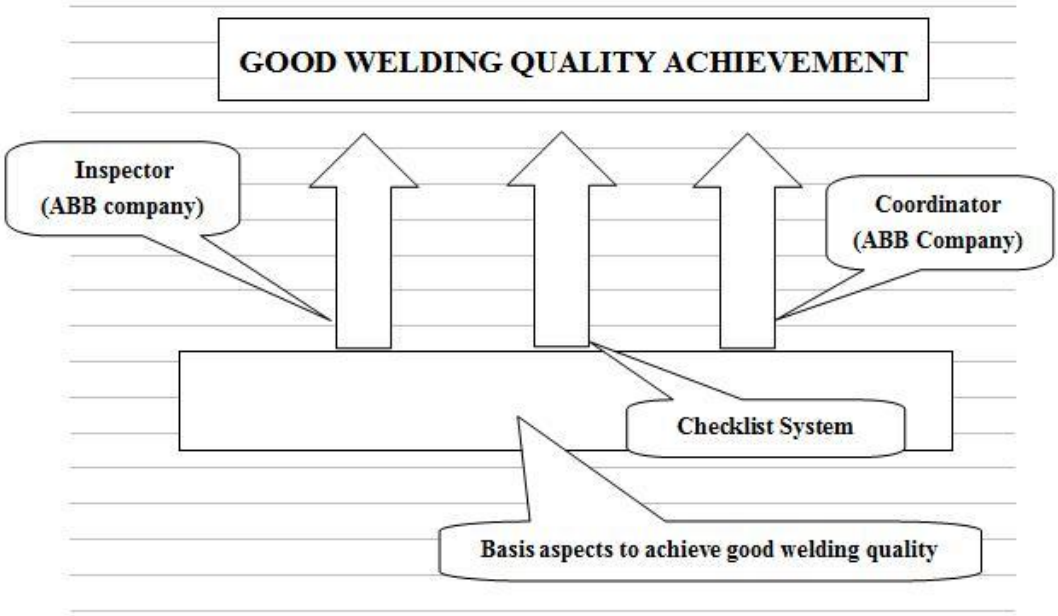

Figure 50. Basis aspects to achieve good welding quality

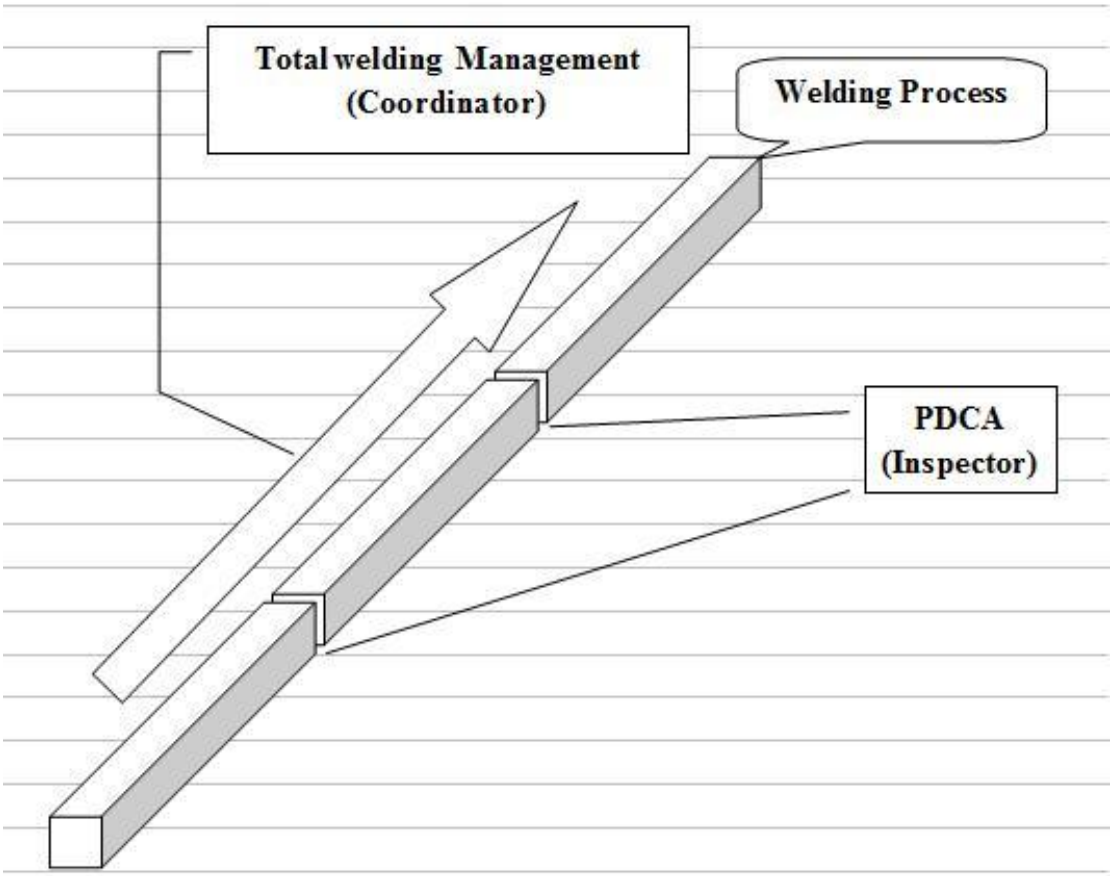

Figure 51. Cooperation work between Inspectors and coordinators (from ABB company)

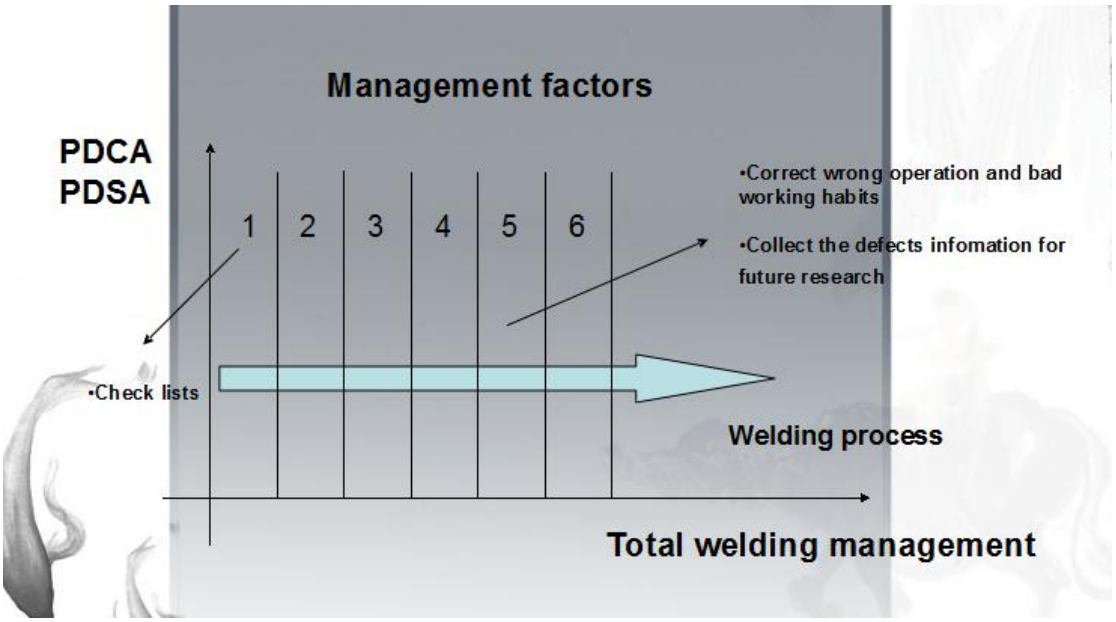

Figure 52. Combination concepts of PDCA and Total welding management

The below figure shows the responsibilities of the inspectors. The main tasks of the inspectors are in charging of checking list and defects record. After making the defects record, and classifying the types of those defects, the inspector can analyse the main or urgent problems happened in the working field. According to this evaluation system, it can make the inspection work and analysis work combining together. Seeing in the Fig. 51 an 52.

8. CONCLUSION

The literature review the situation of those subcontractors as a model for improving quality. Through the implementation of carry out the total welding quality management, the method would identify, quantify and harvest the total potential for welding improvement in the ABB company and subcontractors. The management structure could manage the improvement the projects and assure the results what the ABB company want to achieve. The project makes sure of focusing on the key resources of ABB company to service the welders for welding quality and productivity improvement. The management of reporting and control system would identify the deviations from performance standards, and it also would make the corrective action can be taken as required. This project is a long-term one, it maybe can not be seen the effort in a short period.

During the process, the effect of the project would be floating up and down. The project required that the implementer of the ABB company should have a long-term vision and overall situation controlling. This is a process for continuous improvement in welding quality and productivity. In order to maintain stability of the achievement of welding product quality, we must have to make a long term plan. In the welding management system, the managerial, technical and welding skills training for every people are mutual influence and restraint.

For the purpose of the thesis, the total welding management is a method, and it can guided the right direction for every implementor. Both of the coordinators and inspectors of ABB company can make sure the method be carrying out in right way. In another word, just the people can decide the direction of the method right or wrong.

After reading the thesis, the concepts of PDCA and Total welding management are from

different view to be in charge of the welding quality. The total welding quality management, it means monitoring the whole welding process. Overall, the total welding quality management do not concern too much details of welding. And the concept of PDCA, it is process to check the current situation in a specific period of time.

During checking, the inspectors would find the defects of the welding products. Then they make a history record for the subcontractors. It would find a approach or method to solve the similar problems, when the subcontractor make same or similar problems. It would save time and cost for the future work. The coordinators of ABB company should follow the whole welding process, and ensure every steps doing in the right order. The multifunction of coordinators and inspectors could monitor the welding process from horizontal and vertical directions. The coordinator can correct the mistakes what happened in the work field immediately. The inspector can set up a history record, and reduce the pressure for the future work. There also are integrated management what combined by long term and short term work ways.

In summary, the good trained inspectors and coordinators represent the good level management, and the good level management decides the good welding skills welders, and the good welding skills welders decides the good welding quality products. A bad shearer never had a good sickle. Due to the welding quality control, we should not just focus on the defects of the welding products. For contrary, the manager should have a long sight view in the welding process control. It would make us not to get lost in the direction for the welding quality problems.

REFERENCE

[1] Bartlett, C. & Davidsson, A, "Communication style". Improve Your Global Competence, pp 198-223, 2003

[2] Webpage:
The way of tackling problems, "www.lortui.com/.../550/viewspace-118263", (retrieved 15.11.2009)

[3] Webpage:
The way of expression, "q.sohu.com/forum/7/topic/3940229", (retrieved 27.11.2009)

[4] Webpage:
Sense of time, "www.chinataiwan.org/.../t20080926_754419.htm", (retrieved 2.12.2009)

[5] Webpage:
Relationship orientation, "http://www.yz13.jinedu.cn/jtjy/jzkt/200905/256.html", (retrieved 10.1.2010)

[6] Webpage:
Chinese people's interpersonal relationships,
"www.igo.cn/News/200803/633413999370817500.shtml", (retrieved 3.12.2009)

[7] Webpage: Authority structure, "www.igo.cn/Bbs/showtopic-9651.aspx", (retrieved 30.11.2009)

[8] Webpage:
Working style and distribution of the benefit, "blog.sina.com.cn/u/1219986174", (retrieved 15.12.2009)

[9] Webpage:
Self-perception, "blog.sina.com.cn/s/blog_5119e21c0100bjl4.html", (retrieved 23.12.2009)

[10] Webpage:
The way to express views, "blog.zol.com.cn/log_list.php?userid=zol-ebc...", (retrieved 2.1.2010)

[11] Webpage:

Authority structure in China, "www.bettermanagement.com", (retrieved 6.1.2010)

[12] Webpage:
Western and eastern leadership,
"http://gcontent.nddaily.com/1/41/1415db70fe9ddb11/Blog/745/81fb07.html", (retrieved 11.1.2010)

[13] J.R. Barckhoff, P.E, "Total welding management". ISBN: 0-87171-743-3, pp 10-12, 1980

[14] JinChuan.Zen, "Welding quality management and inspection". ISBN: 978-7-111-25674-8, pp 177-182, 2009

[15] JinChuan.Zen, "Welding quality management and inspection". ISBN: 978-7-111-25674-8, pp 232-241, 2009

[16] J.R. Barckhoff, P.E, "Total welding management". ISBN: 0-87171-743-3, pp 22-23, 1980

[17] J.R. Barckhoff, P.E, "Total welding management". ISBN: 0-87171-743-3, pp 24-25, 1980

[18] JinChuan.Zen, "Welding quality management and inspection". ISBN: 978-7-111-25674-8, pp 332-348, 2009

[19] JinChuan.Zen, "Welding quality management and inspection". ISBN: 978-7-111-25674-8, pp 394-401, 2009

[20] Webpage: PDCA, "http://en.wikipedia.org/wiki/PDCA", (retrieved 17.12.2009)

[21] SFS-EN ISO 6947, "Requirements in welding process"

[22] Webpage:
Welding symbols, "http://www.roymech.co.uk/Useful_Tables/Drawing/Weld.html", (retrieved 17.10.2009)

[23] YuChuan.Chen, "Modern welding handbook". ISBN 7-111-16024-X, pp 675-680, 2005

[24] YuChuan.Chen, "Modern welding handbook". ISBN 7-111-16024-X, pp 733-749, 2005

GLOSSARY OF TERMS

IWI International welding inspection

MIG/MAG MIG (Metal Inert Gas) welding, MAG(Metal Active Gas), also sometimes called GMAW (gas metal arc welding).

MMA Manual metal arc welding

PDCA PDCA (plan-do-check-act) is an iterative four-step problem-solving process typically used in business process improvement.

Quality Quality is usually perceived as the application's ability to fulfill the reasonable expectations and needs set by the end user. Because of the demand by the end user, it can change into special index, and make the product to follow the index.

Quality assurance Quality assurance can be divided by two parts, internal quality assurance and external quality assurance.

Quality control Quality control defines the activities of making sure the products satisfying quality requirements. Product quality is achieved in long process as a ring.

Quality management Quality management defines the necessary management of functions and activities for making sure or reaching quality requirement.

SFS-EN ISO 3834-3 Standard quality requirements

Six Sigma Six Sigma at many organizations simply means a measure of quality that strives for near perfection. Six Sigma is a disciplined, data-driven approach and methodology for eliminating defects (driving towards six standard deviations between the mean and the nearest specification limit) in any process -- from manufacturing to transactional and from product to service.

Slag Slag is the residue left on a weld bead from the flux. It shields the hot metal from atmospheric contaminants that may weaken the weld joint. Slag can also be globules of molten metal that are expelled from the joint and then re solidify on the metal surface. in either case, they are usually chipped away with a slag hammer.

Social orientation Considering from China's history and cultural traditions, China's social orientation has four main characteristics: family orientation, relationship orientation, authority orientation and other-people orientation.

Undercut Undercutting is a defect that appearsas a groove in the parent metal directly among the edges of the weld it is most common in lap fillet welds, but can also be encountered in fillet and butt joints. This type of defect is most commonly caused by improper welding parameters, particularly the travel speed and arc voltage.

Welding dust The welding dust is included the smoke and dust. The contents of the welding dust is complex.

Welding quality management Welding quality management defines the enterprise, which does the welding production, efficiently control welding structure quality during playing the quality function in management.

Welding symbols Weld symbols are used to indicate the welding processes used in

metal joining operations, whether the weld is localized or "all around", whether it is a shop or field weld, and the contour of welds.

WPS Welding procedure specification

APPENDIX

APPENDIX I. The factors of welding quality

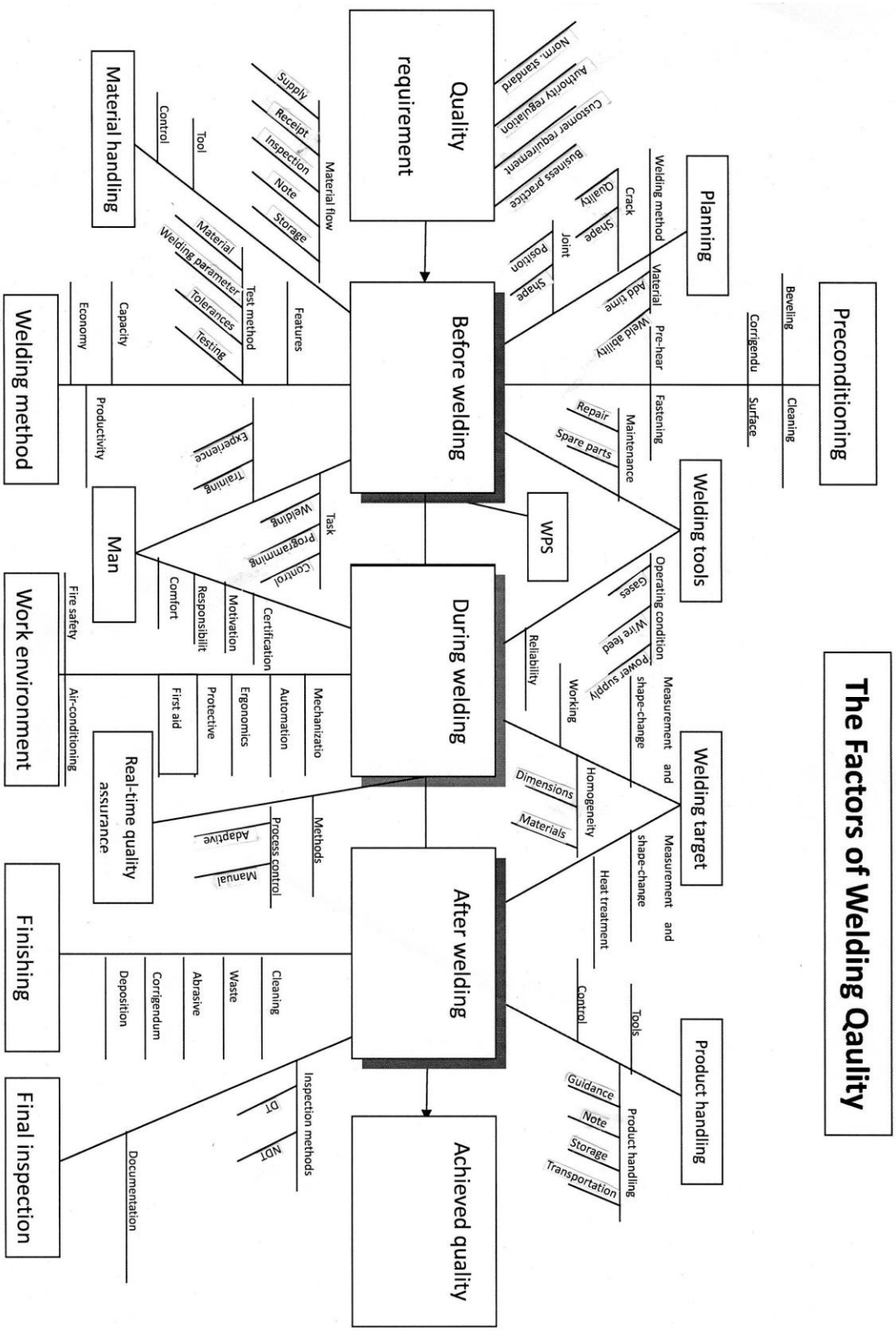

APPENDIX II. Welders testing and training results

THE LIST OF THE WELDERS IN TEST AND TRAINING.
TEST TIME: 14.05.2009

BIRTHDAY	No.	COMPANY	TEST RESULT
1972	1	Xiang Yi	PD(B)
1966	2	Heng Qiang	PB
1977	3	Heng Qiang	PB
1966	4	Shen Li	PD(B)
1979	5	Hong Yu	PD(B/C)
1972	6	Jia Bao	PB
1987	7	ABB(PUS)	PD(B) 136
1981	8	Shun Zhong	PD(B)
1971	9	Da Cheng	PD(B)
1986	10	ABB(PUS)	PD(B) 136
1972	11	ABB(PUS)	PD(B/C) 136
1977	12	ABB(PUS)	PD(B)
1974	13	ABB(PUI)	PD(B)
1979	14	Nan Tong	PB
1977	15	Nan Tong	PD(B/C)
1970	16	ABB(PUS)	PD(B)

APPENDIX III. Defects types

No.	Type	Description	Diagram
		Type One(Crack)	
100	Crack	Under the effect of welding and other metallurgical factors stress, it is phenomenon that the welding joint of metal atom binding in some area have been destroyed and cracked.	--
1001	Micro Crack	It can be observed in the micro-crack under a microscope.	--
101 1011 1012 1013 1014	Longitudinal Crack	Axis parallel with welding seam: -in the welding seam -in the fusion line -in the HAZ -on the surface of base material	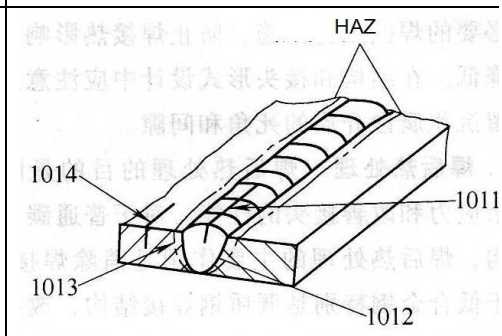
102 1021 1023 1024	Transverse Crack	Axis perpendicular to the welding seam: -in the welding seam -in the HAZ -on the surface of base material	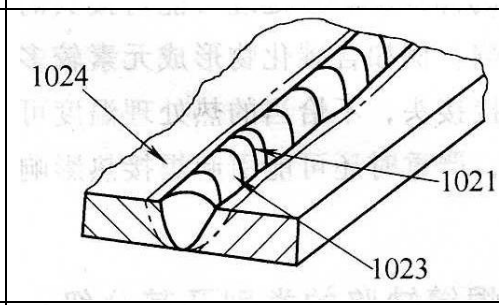
103 1031 1033 1034	Radial Crack	The radial crack on a certain point: -in the welding seam -in the HAZ -on the surface of base material	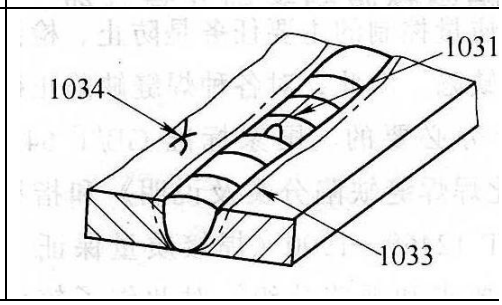

104 1045 1046 1047	Crater Crack	The crack in the crater: -vertical -horizontal -radial	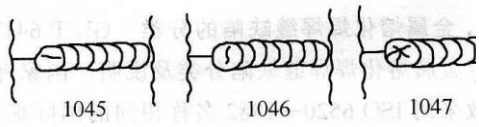
105 1051 1053 1054	Discontinuous Crack	Discontinuous crack located: -in the welding seam -in the HAZ -on the surface of base material	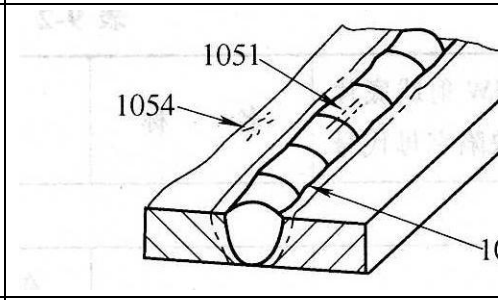
106 1061 1063 1064	Fork-shaped Crack	Main crack splits a group cracks: -in the welding seam -in the HAZ -on the surface of base material	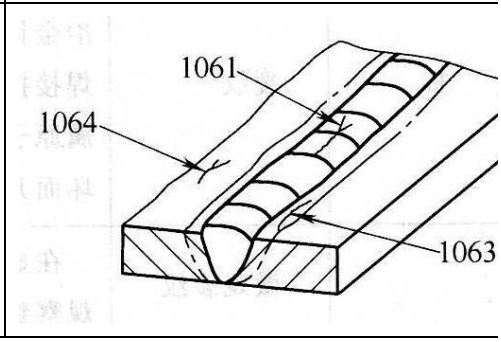
Type Two(Porosity)			
200	Porosity		
201	Porosity	The shielding gas failed to escape from the welding pool.	--
2011	Spherical Porosity	Spherical cavity	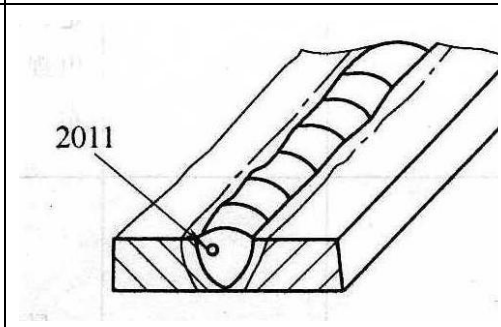
2012	Uniform distribution porosity	The pores uniformly distributed in the welding seam.	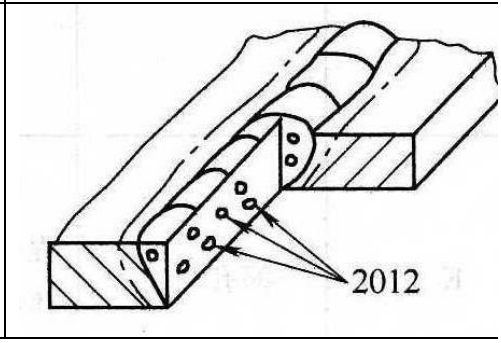

2013	Local-intensive Porosity	Pore group	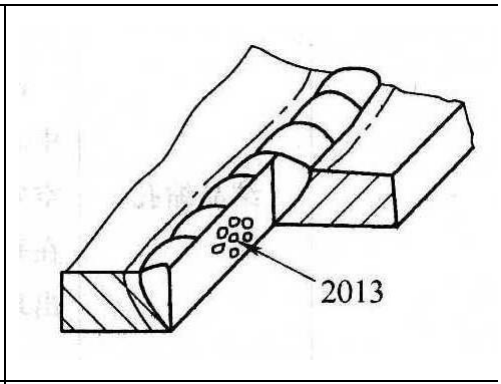
2014	Chain Porosity	Group of pores in the axis of welding seam.	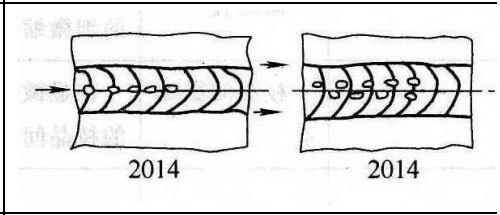
2015	Strip Porosity	Strip pore in parallel with welding seam.	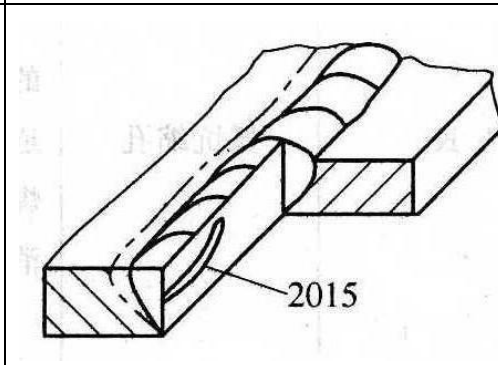
2016	Worm-shaped Porosity	The shielding gas escape to the surface of the welding seam.	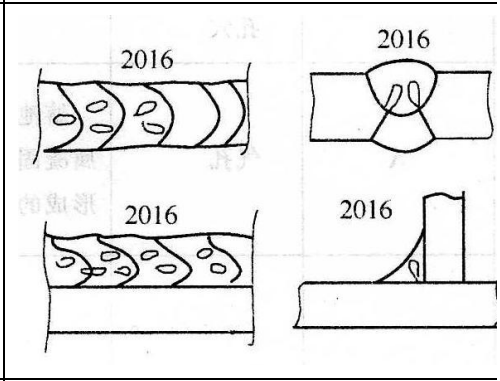
2017	Surface Porosity	Surface pores on the surface of the welding seam.	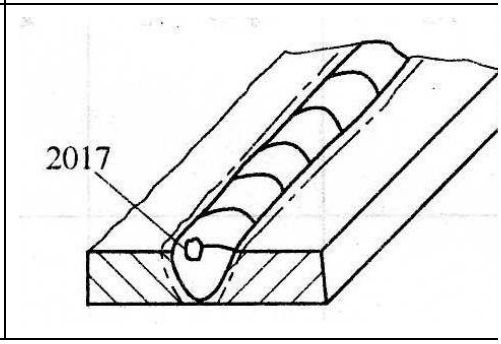

202	Contraction Porosity	During the solidification, the molten metal's surface formed pores in centre of welding pool.	
2021	Crystallization Porosity	The pore is formed during cooling process.	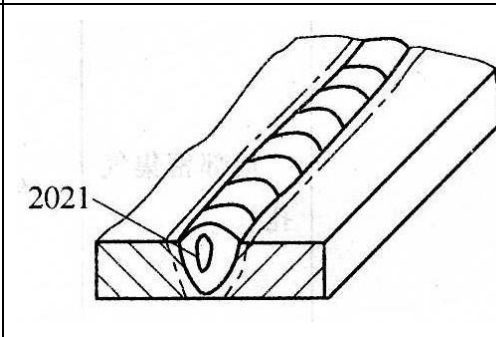
2022	Micro Porosity	Micro pores.	--
2023	Micro Fork-shaped Porosity	Micro fork-shaped pores.	--
2024	Crater Porosity	In the end of welding seam, the pore is formed in the crater.	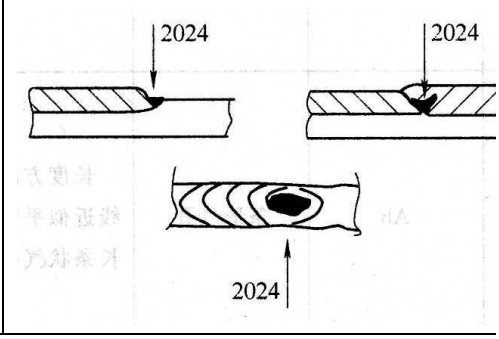
Type Three(Slag)			
300	Solid Slag	Solid slag is left in the welding seam.	--
301 3011 3012 3013	Slag	Un-molten metal is left in the welding seam. The shapes are divided into: -linear -single -other	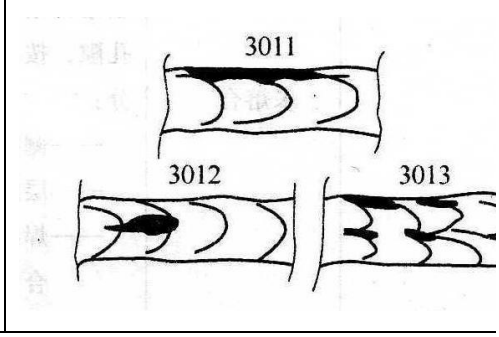

302 3021 3022 3023	Filler Wire Slag	Un-molten filler wire is left in the welding seam. The shapes are divided into: -linear -single -other	As Above
303	Oxide Slag	The metallic oxide is left on the surface of welding seam.	--
3031	Fold	Because of no good protection for the welding pool, the shielding gas turbulence makes oxide stuff on the welding seam.	--
304 3041 3042 3043	Metal Slag	The metal particle from outside. -W -Cu -other	--
Type Four(Penetration)			
400	No Fusion & Incomplete Penetration		--
401 4011 4012 4013	No Fusion	Because the filler wire and base material are not molten together, the gap is formed between each other. -sidewall -between two rounds of welding -root of welding seam	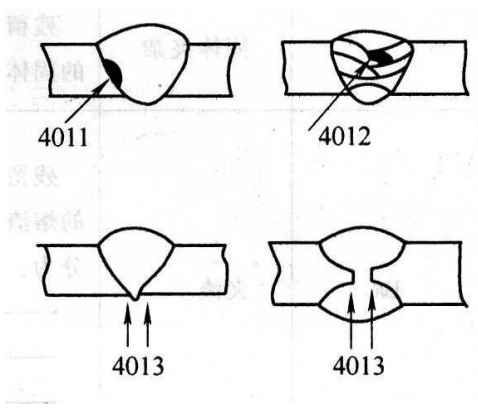

402	Incomplete Penetration	The root of welding seam is incomplete penetration.	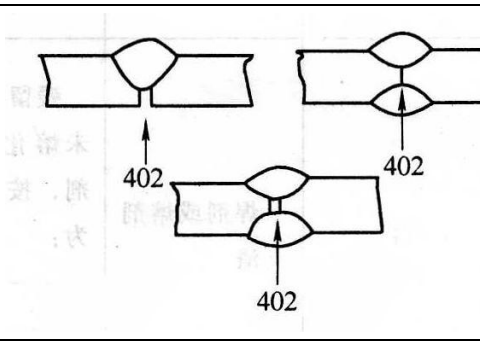
Type Five(Welding Seam Shape Defects)			
500	Welding Seam Shape Defects	The shape of welding seam is not following the requirement of WPS.	--
5011 5012	Continuous Undercut Discontinuous Undercut	Because of incorrect welding operation, the continuous or discontinuous undercut is formed in the root or toe of the welding seam.	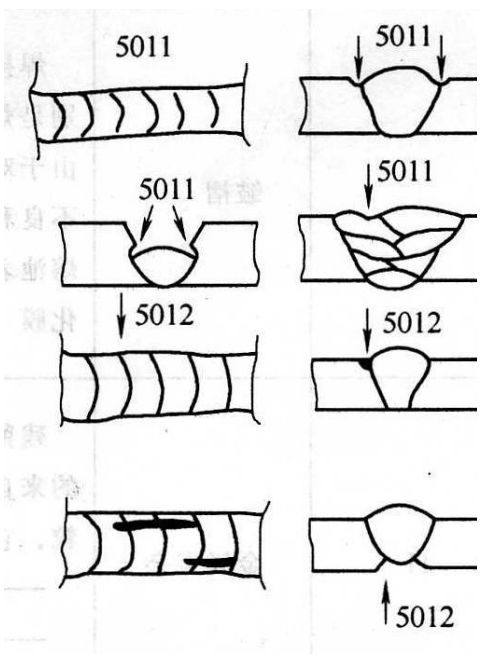
5013	Shrinkage Groove	Because of temperature of the metal, the groove is formed in the welding seam's root.	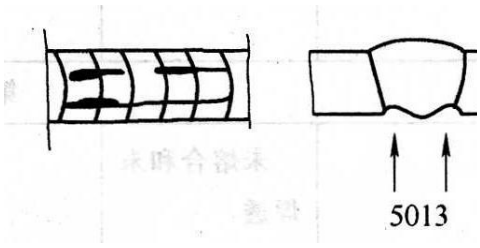
502	Welding Seam Too High	The height of welding seam is higher than the requirement.	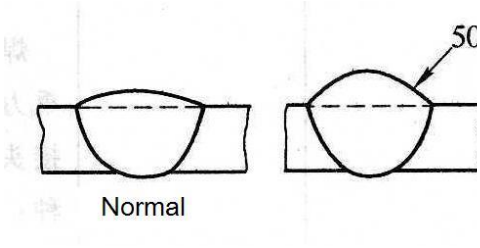

503	Convex Rate Too Much	The convex rate of welding seam is not following the requirement.	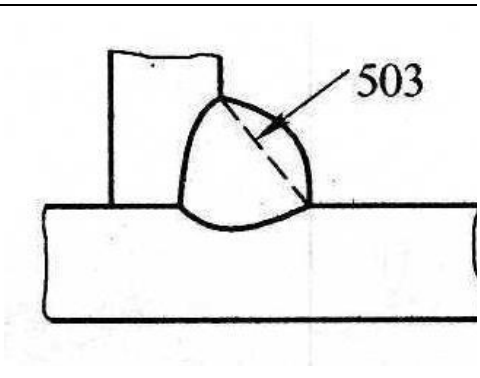
504	Collapse	Excessive molten metal cave in the root of welding seam.	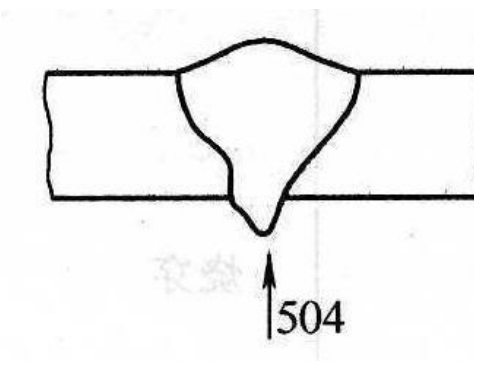
5041	Local Collapse	Some part of welding seam caves in.	--
505	Bad Welding Surface	The tangent plane between welding seam surface and toe's angle is too small.	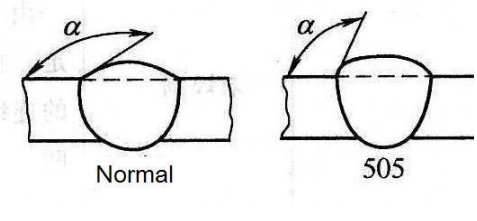
506	Overlap	During welding process, the molten metal flows on the base material.	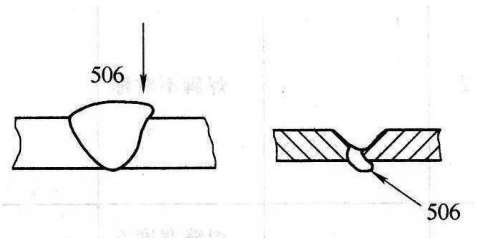
507	Linear Misaligment	Two pieces of base material are not in the same level.	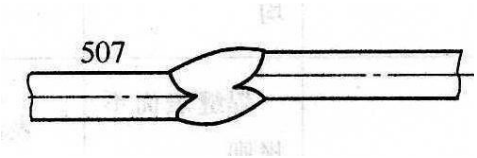
508	Angular Deviation	Two pieces of base material is into angle.	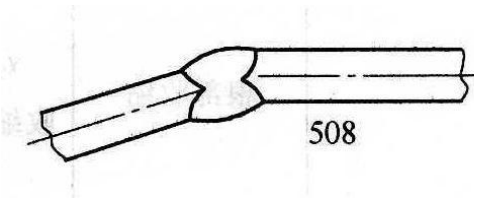

509 5091 5092 5093 5094	Sagging	The molten filler wire is sagging by the gravity force. -PC -PA -PB -edge	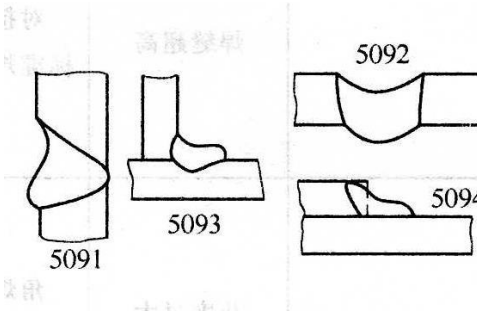
510	Burn Through	The molten filler wire drops from the other side of the groove. The welding seam is formed penetrating pore.	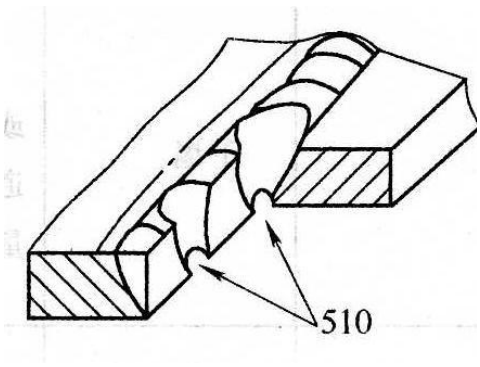
511	Incompletely Filled Groove	The filler wire does not fully filled in the groove.	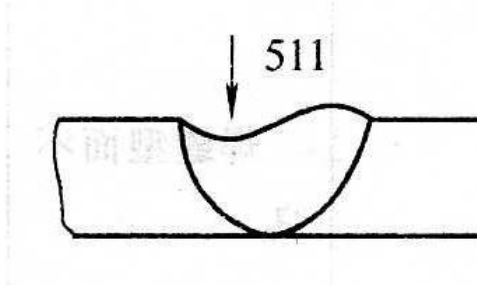
512	Excessive Asymmetry of fillet weld		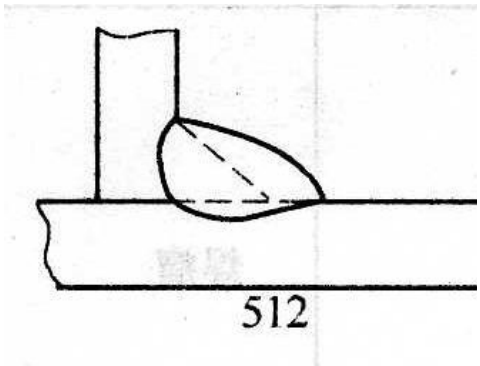
513	The width of the welding seam is uneven	The width of welding seam changes too much.	--
514	The surface of welding seam is irregular	The surface of welding seam is too rough.	--

515	Root Concavity	The root of welding seam cave in.	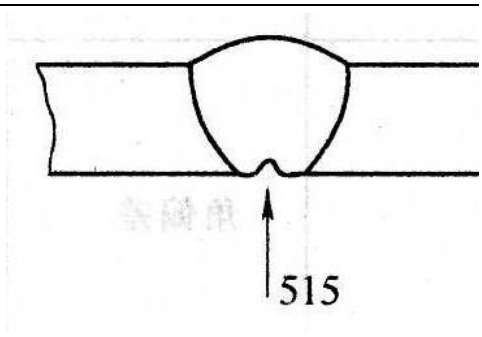
516	Root Porosity	The shielding gas left in the root of welding seam and formed pore.	--
517	Poor Restart	The poor situation between two weld seam.	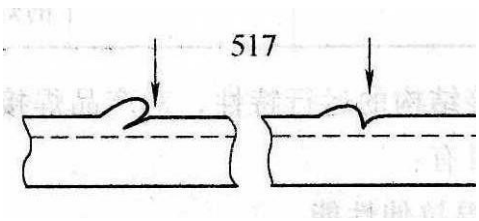
Type Six(Other)			
600	Other	The defects can not be included in the previous five types.	--
601	Stray Arc		
602	Spatter		
6021	--		--
603	Surface Tear		
604	Wear Scar		
605	Hammer Mark		
606	Too Much Polish Work		
607	Tracking Wrong		
608	Welding Rounds Dislocation		

APPENDIX IV. Inspection Record

Inspection Record

Subcontractor

No.	Type Of Defects:	Result of modify

Date:

Signature: **#Coordinator(ABB)** **#Inspector(ABB)**

#Coordinator(Subcontractor)

Defect Type	One	Two	Three	Four	Five	Six
	10	20	30	40	50	60

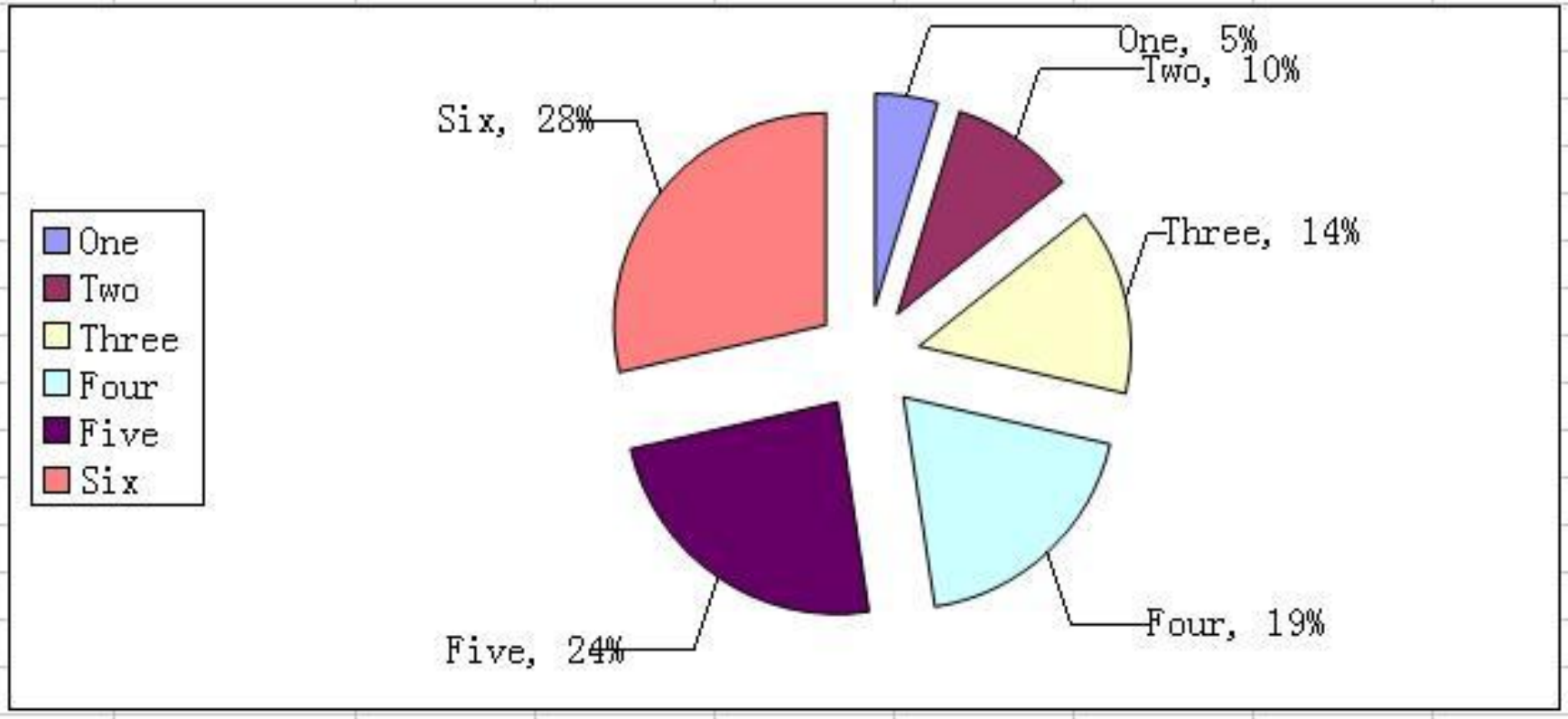

APPENDIX V. Checklist system

The Welder Checklist

Subcontractor:

The Name of Welder	Chinese Welder Operation Permit	Validity	ABB Welding Permit / Type	Validity
Tian Bin	-	10.2009	**OK / PD**	13.5.2011
An Aifang	**OK**	07.2009	- /	
She Yubao	**OK**	07.2009	- /	
Zhao Jun	**OK**	06.2011	- /	
Liang Tinghai	-	03.2008	- /	
Wang Lei	**OK**	10.2010	- /	
Yang Zhiguo	**OK**	01.2010	- /	

Note:
All of the welders must have the copy of welding certificate as proof.

□

Score:

Date:

Signature: **#Coordinator(ABB)** **#Inspector(ABB)**

#Coordinator(Subcontractor)

Storage Condition Checklist

Subcontractor:

Base Material Storage Condition		
a. Warehouse		
1) Warehouse area cleanness not quite clean □		
2) Store near with acid, alkali and cement materials **No** □		
3) Different varieties of steel are separated **No** □		
The surface of steel is serious corrosion **Yes** □		
Note: **All of the steel must have the copy of material certificate as proof.** □		
Filler Material Storage Condition		
a. The Environment		
Temperature: **8.9 °C** □	**Humidity:** **55%** □	**Water, acid, alkali, volatile liquids and corrosive materials exist** No □
b. Filler Wire Placing		
Place on the metal or wooden shelves No □	**The distance from shelf: To ground 0mm** **To wall 0mm** □	

c. Packaging	
The packaging of filler wire are damaged No ☐	
d. Filler Wire ☐	
Type: **GB8110 (135)** **J507 (111)**	**Purchasing Date:** **13.11.2009**
Note: **All of the filler wire must have the copy of material certificate as proof.** ☐	

Shielding Gas Storage Condition

a. Closed-room working plant No ☐
b. Leakage phenomenon(By suds testing) No ☐
c. Dry, cool and ventilated in working plant Yes ☐
d. Stay away from electrical appliance and heat variety No ☐
e. Different gases separated No ☐
f. Full and empty gas bottles separated and marked No ☐
g. Oil substance on the gas bottle No ☐

Note: **All of the shielding gases must have the copy of purchasing receipt as proof.** □
Score:
Date: **Signature:** **#Coordinator(ABB)** **#Inspector(ABB)** **#Coordinator(Subcontractor)**

Welding Area Checklist

Subcontractor:

Welding Area Checklist	
Subcontractor	
Factory Area Cleanness	
C	**A (clean) , B (not quite clean) , C (messy)**
Ground Cable	
C	**A (Good) , B (Not so good), C (Bad condition)**
Welding Wire Cable	
B	**A (Good) , B (Not so good), C (Bad condition)**
Gas Cable	
B	**A (Good) , B (Not so good), C (Bad condition)**

Ventilation Situation	
A	**A (Good) , B (Not so good), C (Bad condition)**
Ground Cable Fixed	
A	**A (Good) , B (Not so good), C (Bad condition)**
Arc Barrier	
No	◻
Welding Protection(Welding clothes, welding shoes, welding gloves,etc)	
Good	◻
Flammable Liquids in Welding Area	
No	◻
Empty Shielding Gas Bottles Separately Placed	
No	◻
Shielding Gas Bottles Fixed	
No	◻
Shielding Gas Bottles' Situation(Oil on the surface of the bottles)	
No	◻
Clearly Marked Working Area	
No	◻
Score:	
Date:	
Signature:	**#Coordinator(ABB)** **#Inspector(ABB)**
	#Coordinator(Subcontractor)

Welding Machine Checklist

Subcontractor:

Welding Machine Information
a. Welding Machine Information
Welding Machine Model ☐
Welding Machine Manufacturer ☐
Rated Voltage/Current ☐
Current Adjustment Range ☐
Voltage Adjustment Range ☐
b. Welding Machine Testing
Voltage Testing
1) Stepless Regulation Welding Machine

Difference between real value and displayed value of voltage(Test three times) **1.** **2.** **3.** □	**Difference between real value and displayed value of current(Test three times)** **1.** **2.** **3.** □
2) Step Regulation Welding Machine	
The voltage difference between two adjacent(Test two groups) **1.** **2.** □	
Aspirated Hose Test	
Deformation and leakage of hose(Connected to gas line and made the gas pressure 300kPa) □	
Control System and Wire Feeding System Test	
# Make sure connecting well(Gas, electricity, shielding gas heater and hose) **Shielding gas heater working well** □	
Gas supplier working well(Before welding) □	
Wire feeding system working well(Before welding) □	
Wire feeding system stop working(After welding) □	
Gas supplier continue working(After welding) □	
Feeding Speed Test	

Feeding speed changing rate(Calculation method seeing reference 1) □
Gas Heater Pressure Test
Joint leakage phenomenon(When the pressure up to 90000kPa) □
Welding Test
 # Following the figure(seeing in the reference 2), surfacing welding testing on the low-carbon steel **Starting arc easily** □ **Welding process stable** □ **Little spatter** □ **Forming a good welding seam** □
Safety Checking
Safe and reliable ground device □ **Electrical part with shielding cover** □ **Control circuit's voltage under 36V(AC), 48V(DC)** □ **Welding machine shell's situation is good** □

Maintenance record(Last two times) **1.** **2.** □	
Fault description	
1. □	**2.** □
Maintenance worker signature	
Score:	
Note: **All of the welding machines must have the copy of purchasing receipt as proof.**	
Date: **Signature:** **#Coordinator(ABB)** **#Inspector(ABB)** **#Coordinator(Subcontractor)**	

Reference

1. Feeding speed rate calculation

1) 1, 05 times of rated voltage. Shielding gas hose lay on the ground. Testing the feeding speed v_1.

2) 0,9 times of rated voltage. Shielding gas hose lays on the ground. Make the shielding gas

hose as circle. The diameter is 400mm. Testing the feeding speed v_2.

Calculation formula:

$$\Delta v\% = \frac{|v_1 - v_2|}{1/2 * (v_1 + v_2)} * 100\%$$

2. Recommended welding test procedure

Filler wire diameter/ mm	Welding current/ A	Working voltage/V	The length of wire out/mm	Testing piece size/mm	Gas flow rate/ (L/min)	Welding speed/ (m/min)
1,0	100	<22	12	300*20*1,5	6-15	0,3-0,35
1,2	130	<22	15	300*30*3	6-15	0,3-0,35

APPENDIX VI. Evaluation system