LAPPEENRANTA UNIVERSITY OF TECHNOLOGY
LUT School of Energy Systems
LUT Mechanical Engineering

Timo Nykänen

DESIGN OF THE MANUFACTURING EQUIPMENT FOR DIRECT LIQUID COOLED TOOTH-COIL WINDINGS

Examiners: Professor Aki Mikkola
D. Sc. (Tech.) Scott Semken

TIIVISTELMÄ

Lappeenrannan teknillinen yliopisto
LUT School of Energy Systems
LUT Kone

Timo Nykänen

Suoralla nestejäähdytyksellä varustetun käämin valmistuslaitteiston suunnittelu

Diplomityö

2017

68 sivua, 43 kuvaa, 13 taulukkoa ja 11 liitettä

Tarkastajat: Professori Aki Mikkola
TkT Scott Semken

Hakusanat: sähkömoottori, suora nestejäähdytys, LWLC, systemaattinen koneensuunnittelu

Tämän diplomityön tarkoituksena oli kehittää laitteisto suoralla nestejäähdytyksellä varustetun sähkömoottorin käämien valmistamiseen. Työn teoriaosassa perehdytään lyhyesti sähkömoottoritekniikkaan erityisesti jäähdytyksen näkökulmasta sekä myöhemmin suunnitteluprosessin yhteydessä hyödynnettyyn systemaattisen koneensuunnittelun metodiin.

Suunnittelun aikana todettiin, että koska käämi sisältää taivutuksia moneen suuntaan, on helpointa jakaa valmistus kahteen vaiheeseen: ensimmäisessä vaiheessa taivutetaan viisikerroksinen, kaksoiskierteinen aihio, ja toisessa vaiheessa tehdään päätyjen ja jäähdytysputkien vaatimat pienemmät taivutukset.

Suunnittelun lopputuloksena syntyi kaksi laitteistoa, joista ensimmäinen käyttää kahta askelmoottoria kaapelin taivuttamiseksi haluttuun monikerroksiseen, kaksoiskierteiseen muotoon. Toinen laite suorittaa eniten voimaa vaativan taivutuksen hydrauliikkaa käyttäen, minkä jälkeen viimeiset, jäähdytysputkien päihin tulevat taivutukset tehdään manuaalisesti. Molempien laitteistojen suunnittelussa pyrittiin kiinnittämään huomiota valmistusystävällisyyteen, säädettävyyteen ja kustannusten minimointiin.

3D-mallin perusteella molemmat koneet vaikuttavat toimivilta. On kuitenkin huomioitava, että laitteiston toiminta selviää lopullisesti vasta prototyyppien rakentamisen ja koekäytön jälkeen.

ABSTRACT

Lappeenranta University of Technology
LUT School of Energy Systems
LUT Mechanical Engineering

Timo Nykänen

Design of manufacturing equipment for direct liquid cooled tooth-coil windings

Master's thesis

2017

68 pages, 43 figures, 13 tables and 11 appendices

Examiners: Professor Aki Mikkola
Scott Semken, D. Sc. (Tech.)

Keywords: Electrical machine, direct liquid cooling, tooth-coil windings, LWLC

The objective of this master's thesis was to develop manufacturing equipment for direct liquid cooled tooth-coil windings. The fundamentals of electrical machines and different cooling methods are explained briefly. Also a systematic approach to engineering design is discussed.

The design process revealed that because of the complicated form of the coil, it is easier to manufacture the coil in two stages: The first stage produces the duplex-helical five-layer form and the second stage produces the end bends and small bends in both ends of the coolant conduit.

As a result, two sets of tooling were designed. The first machine uses two electrical stepper motors to form the duplex-helical multilayer form. The second machine uses hydraulics to produce the most challenging end bend. Coolant tubes are bent manually. During the design process, the principles of DFMA, adjustability and costs were taken into account.

According to 3D models, both machines seems to be workable, but the final result will be found out when prototypes are built and tested.

ACKNOWLEDGEMENTS

I would like to express my gratitude to my examiners, Professor Aki Mikkola and Mr. Scott Semken, D. Sc. (Tech.), firstly, for offering me this great opportunity to work on the LWLC project, and secondly, for all the invaluable guidance and assistance in the past months. Special thanks to Jari-Pekka Haapala for designing the control system. Thanks also to all of the other colleagues of LWLC research team and of the Laboratory of Mechanical Engineering. Your comments and advice have been valuable during this project.

I also want to thank all of my friends for their help during my studies here in Lappeenranta. Special thanks for relaxing coffee breaks, which occasionally turned out to be unexpectedly productive also in terms of this project. My years at the university have been the best time of my life because of you all.

I am especially grateful to my parents and siblings for their patience and support during these years.

Lappeenranta, June 11, 2017

Timo Nykänen

TABLE OF CONTENTS

LIST OF SYMBOLS AND ABBREVIATIONS

A	Cross-sectional area of the conductor [m^2]
AC	Alternating current
A_{cool}	Cooling flow area [m^2]
$\vec{B}$	Flux density [T]
$\vec{E}$	Electric field strength [N/C]
F	Tangential force [N]
$\vec{F}$	Electromagnetic force
I	Current [A]
P_{m}	Power [W]
P_{ad}	Additional losses [W]
P_{Cu}	Resistive losses in a conductor [W]
P_{fan}	Fan power [W]
P_{cool}	Cooling power [W]
P_{loss}	Electrical losses [W]
Q	Electric charge [C]
R	Resistance [Ω]
R_{AC}	AC resistance
S	Heat transfer area [m^2]
T_m	Torque [Nm]
T	Temperature [K]
f	Frequency [Hz]
i	Current [A]
$\vec{\imath}_x$	Current about x-axis
$\vec{\imath}_z$	Current about z-axis
$\vec{l}$	Length of a conductor [m]
m	Number of phases
q_s	Emitted energy [W/m^2]

r	Rotor radius [m]
$\vec{v}$	Speed of a charge [m/s]
w_{air}	Velocity of air [m/s]
α	Thermal resistivity coefficient
ε	Emissivity
λ	Thermal conductivity [W/mK]
ρ	Resistivity [Ωm]
σ	Boltzmann constant [W/m^2K^4]
Φ_{th}	Heat flow [W/m^2]
Ω_m	Angular frequency [rad/s]
3D	Three-dimensional
CAD	Computer-aided design
DC	Direct current
DD	Direct drive
DLC	Direct liquid-cooled
DFA	Design for assembly
DFM	Design for manufacture
DFMA	Design for manufacture and assembly
LUT	Lappeenranta University of Technology
LWLC	Lightweight liquid cooled
PM	Permanent-magnet
PMSM	Permanent-magnet synchronous machine

1 INTRODUCTION

Electric motors and generators are widely used in many applications in our daily lives. However, traditional electrical machines are not optimal for applications that require high torque at low speeds. To meet these requirements, conventional medium- or high-speed electrical machines are coupled to a gearbox, which reduces the rotational speed. On the other hand, the gearbox causes mechanical losses, increases weight and costs, and is more unreliable than direct-drive electrical machines. In direct-drive electrical machines, high torque at low speeds can be achieved by increasing the rotor radius. However, increasing the rotor radius will increase also weight and manufacturing, transportation and installation costs.

The torque of an electric machine is the product of the rotor radius and tangential force in an air gap. To increase the torque, it is necessary to increase either the radius of the rotor, the tangential force in the air gap, or both. As mentioned previously, increasing the rotor radius increases also weight and costs. Increasing the tangential force in the air gap is also challenging because it means increasing the linear current density in the windings. Because of the electrical resistance, this causes more waste heat in stator windings than traditional air-cooling is able to remove. (Polikarpova et al. 2015, p. 523-524)

1.1 Background

In traditional air-cooled electrical machines, the cooling restricts the maximum linear current density in the windings. To solve this problem, Lappeenranta University of Technology (LUT) has developed a patented direct liquid-cooled (DLC) synchronous electrical machine based on a tooth-coil winding structure. In the DLC system, the coolant fluid flows inside the copper windings where the heat is produced. DLC is more effective than air-cooling, which enables increasing the linear current density in the copper windings. The effectiveness of DLC windings has been proven with a small prototype made at LUT. Using DLC technology, electrical machines can produce more torque without increasing the rotor diameter. (Polikarpova et al. 2015, p. 524) The main drawback is the complicated multilayer duplex-helical configuration of the coils as shown in Figure 1.

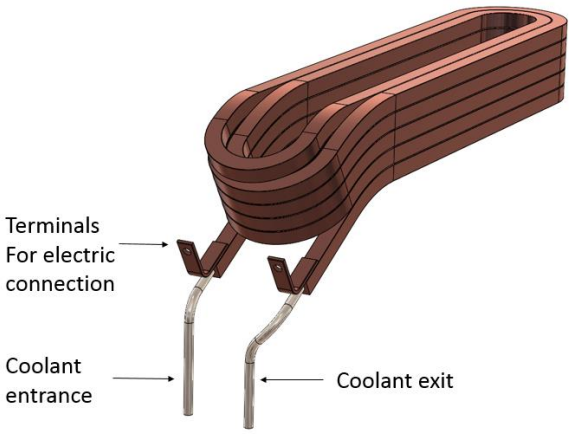

Figure 1. Five-layer duplex helical tooth-coil with internal coolant conduit.

The DLC windings have an internal coaxial coolant conduit made of 1/4” stainless steel tube with 0.035” wall thickness. The coolant fluid enters the inner column from the bottom and leaves from the bottom of the outer column. Terminals for electric connections are mounted at both ends of the coil. Adjacent conductors are electronically isolated with a thin layer of insulation wrapped around the copper.

The stator of the machine is divided into 12 identical segments, and each stator segment includes four coils, two three-dimensional (3D)-printed plastic manifolds and tubing. Coolant entrances from every coil in the segment are connected to one manifold that distributes the incoming cool coolant flow to each coil. The second manifold collects hot, outgoing flow from every coil. The 3D-printed manifolds are also electrical insulation between the coils. The structure of the stator segment is demonstrated in Figure 2.

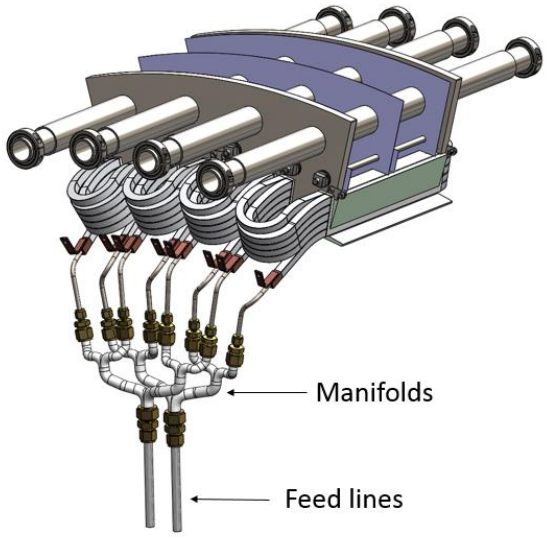

Figure 2. Stator segment with coolant manifold and tubing.

The manifolds in the stator segment are connected to the center manifold using ½" nylon tubes. The center manifold collects the hot coolant flow from stator segment manifolds and takes it to the external cooling unit and also distributes the incoming cool coolant flow back to the stator segment manifolds. The cooling loop inside the machine is shown in Figure 3.

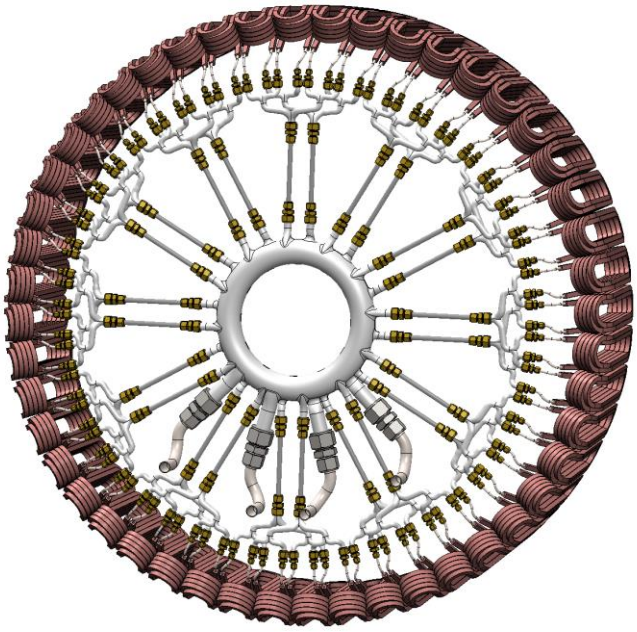

Figure 3. The cooling loop inside the machine.

1.2 Objective and scope

The objective of this thesis is to develop tooling to manufacture the coils for a lightweight liquid cooled (LWLC) electrical machine. The coil tooling prototype will be manufactured and used to bend the coils for a proof-of-concept prototype of a 500 kW LWLC electrical machine. The machine should be able to do at least one coil per hour and be operated by one person. The greatest challenge is the complicated five-layer duplex-helical configuration of the coil. To improve electrical efficiency, the amount of active material in the coil bends must be minimized. This thesis focuses on the mechanical design of the manufacturing equipment. Principles of design for manufacture and assembly (DFMA) are followed during the design process. The mechanical modeling is accomplished using three-dimensional (3D) computer aided design (CAD) software.

2 THEORY

Electrical machines are used to convert energy from one form to another. Electrical generators convert mechanical energy to electricity and electric motors convert electricity to mechanical energy. The majority of mechanical work done by an electric motor is rotation, but also creating linear movement is possible. Usually rotating electrical machines contain two primary parts. The rotating part of the machine is called the rotor, and the stationary part is called the stator. Between the rotor and the stator is an air gap. The three most common electrical machine types are direct current (DC), synchronous and asynchronous machines. (Vukosavic 2013, p. 2-4)

The operation of an electrical machine is based on the interaction of the electrical current and magnetic field. Current conductors, called windings, are made of insulated conductors that are connected to an external electrical source or consumer. Magnetic circuits are made of ferromagnetic materials, which are usually stacked iron sheets separated by insulation layers. (Vukosavic 2013, p. 2-4)

The basic principle for electromechanical conversions is Lorentz law:

$$\vec{F} = Q\vec{E} + Q(\vec{v} \times \vec{B}), \tag{1}$$

where $\vec{F}$ is the force acting upon a charge Q, $\vec{E}$ is the intensity of the electric field, $\vec{v}$ is the speed of charge, and $\vec{B}$ is the flux density. (Vukosavic, 2013, p. 25)

Figure 4 presents a conductor with electrical current in a homogenous magnetic field. The current, conductor length, flux density and angle between the conductor and field creates the electromagnetic force F. The force F depends also on the angle between the conductor and the direction of the magnetic field. Using the Cartesian coordinate system and unit vectors of the conductor length and flux density, the force can be expressed as follows:

$$\vec{l} = l\vec{\imath}_x \tag{2}$$

$$\vec{B} = -B\vec{\imath}_z \tag{3}$$

$$\vec{F} = i(\vec{l} \times \vec{B}), \tag{4}$$

where $\vec{F}$ is the electromagnetic force, i is the current, l is the length of the conductor, and B is the flux density. (Vukosavic, 2013, p. 26)

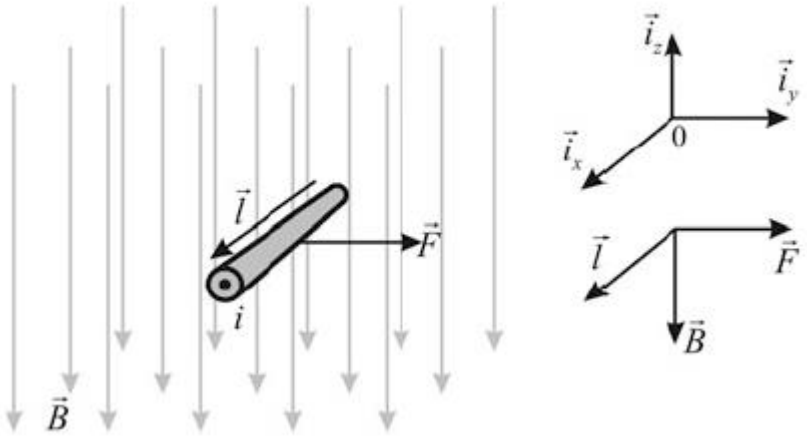

Figure 4. Force acting on a straight conductor in a magnetic field (Vukosavic, 2013, p. 26).

The tangential component of the force in the air gap together with rotor radius generates the torque T as follows:

$$T_m = Fr, \tag{3}$$

where r is the rotor radius and F is the tangential force in the air gap. The power of an electrical motor is a product of the torque and angular frequency of the rotation as follows:

$$P_m = \Omega_m T_m, \tag{4}$$

where P_m is the power, T_m is the torque and Ω_m is the angular frequency of rotation. (Vukosavic 2013, p. 5)

2.1 Permanent-magnet synchronous machines (PMSM)

In permanent magnet (PM) machines, magnetizing is arranged by permanent magnets instead of electricity, which improves the efficiency because there are no losses in the excitation. Also the structure of the rotor is simpler because it does not need windings. In

high-power machines, direct drive permanent magnet machines are also more reliable than other machine types. The main problem for a direct drive (DD) PMSM is its enormous size in high-torque applications. PM machines always need a frequency converter. (Pyrhönen 2008, p. 395-397)

Permanent magnets are very conductive, and consequently, Joule losses occur in them. The losses in magnets increase as the rotation speed of the rotor increases. Also an increasing temperature decreases the remanence of magnets. This makes PM machines especially popular in applications that operate at low speeds because the losses remain low. (Pyrhönen 2008, p. 395-396)

In permanent magnet machines, the magnets are either mounted on the rotor surface or embedded in the surface. Embedded magnets are mechanically and magnetically protected, but also a significant part of the flux is wasted. In a surface-magnet machine, the magnet material is best utilized but the magnets are also exposed to mechanical and magnetic stresses. (Pyrhönen 2008, p. 395-398)

2.2 Losses in electrical machines

The electrical efficiency of motors and generators is never 100%, and as a result, part of the electrical energy is always converted to heat. Losses in electrical machines are divided into four elements: iron losses, resistive losses, mechanical losses and additional losses.

2.2.1 Iron losses

Iron losses comprise two parts: eddy current losses and hysteresis losses. An alternating field causes hysteresis, which leads to losses in a material. The eddy current is caused by the alternation of the flux in the iron core, which induces voltages in the conductive iron core. (Pyrhönen 2008, p. 193-195) In ferromagnetic materials used in the magnetic circuits of electrical machines, the losses caused by hysteresis are minor compared to eddy current losses. Eddy currents can be minimized by increasing the resistivity of the material. This is commonly done by using isolated lamination sheets instead of a solid metal core. Electrical steels also contain a small amount of silicon, which increases the resistivity significantly. (Vucosavic 2013, p. 75)

2.2.2 Resistive losses

Resistive losses (Joule losses) are caused by resistance in the stator windings. The resistance of the conductor can be expressed as follows:

$$R = \frac{\rho l}{A}, \tag{5}$$

where ρ is resistivity, which is a property of material, l is the length of the conductor, and A is the cross-sectional area. The equation 5 shows that the resistance of the conductor can be decreased by increasing the cross-section of conductors. (Hanselman 2006, p. 33)

Resistive losses in a conductor P_{CU} can be expressed as follows:

$$P_{Cu} = mI^2 R_{AC}, \tag{6}$$

where m is the number of phases, I is the current, and R_{AC} is the AC resistance of the phase winding. (Pyrhönen 2008, p. 458)

The resistivity of the material is not constant, but it is dependent on temperature. When the temperature increases also the resistivity increases. Resistivity versus temperature for copper and aluminum can be approximated as follows:

$$\rho(T) = \rho(T_0)[1 + \alpha(T - T_0)], \tag{7}$$

Where ρ is the resistivity, T is the temperature, T_0 is a base temperature and α is a thermal resistivity coefficient for the material. (Hanselman 2006, p. 91)

2.2.3 Mechanical losses

Mechanical losses comprise friction in the bearings, windage and ventilator loss. The bearing type, lubricant, shaft speed and load on the bearing affect the bearing losses. Bearing losses can be estimated using bearing manufacturers' guidelines. Windage losses are caused by the friction between the rotating parts and surrounding fluid, so they are highly dependent on the rotating speed of the machine. Ventilator losses are dependent on the rotating speed of

the fan. Often the fan is mounted to the shaft of the electrical machine, but in low-speed machines the fan usually needs its own motor. (Pyrhönen 2008, p. 460-462)

2.2.4 Additional losses

Additional losses sum up the electromagnetic losses that are not resistive or iron losses. Because additional losses are extremely difficult to determine, they are usually assumed to be a certain percentage of the input power of the machine. Typical values for additional losses in different machine types are shown in Table 1. (Pyrhönen 2008, p. 460)

Table 1. Additional losses in different types of electrical machines. (Pyrhönen 2008, p. 459)

Machine type	Additional losses of input power
Squirrel cage motor	0.3–2% (sometimes up to 5%)
Slip-ring asynchronous machine	0.5%
Salient-pole synchronous machine	0.1–0.2%
Nonsalient-pole synchronous machine	0.05–0.15%
DC machine without compensating winding	1%
DC machine with compensating winding	0.5%

If additional losses are known for one pair of the frequency and current, it is possible to define them for another pair of current and frequency as follows:

$$P_{ad} \sim I^2 f^{1.5} \,, \tag{8}$$

where I is the current and f is the frequency. (Pyrhönen 2008, p. 460)

2.3 Methods of heat transfer

According to the second law of thermodynamics, the temperature difference always evens out. Heat flows from the higher temperature to the lower temperature. Heat can be transferred by three methods: convection, conduction and radiation.

2.3.1 Conduction

By conduction, the heat can transfer by molecular interaction or free electrons. In solids, liquids and gases, the energy flows from molecules at a higher energy level to ones at a lower energy level. The heat transfer between free electrons can happen in liquids and especially in pure metals. In alloys, the number of free electrons varies notably, and in non-metallic

materials, the number of free electrons is low. Heat flow transferred by conduction can be calculated as follows:

$$\Phi_{th} = -\lambda S \nabla \mathrm{T}, \tag{9}$$

where λ is the thermal conductivity, S is the heat transfer area and ∇T is the temperature gradient. Thermal conductivity is a material property and depends on temperature. The thermal conductivity of metals usually decreases as the temperature rises. (Pyrhönen 2008, p. 463)

2.3.2 Convection

Heat transfer between a higher temperature object and a lower temperature coolant flow is called convection. The heat transfers from a warmer object to the coolant fluid molecules close to the surface. At the molecular level, the fluid molecules with higher energy displace the ones with lower energy. Convection can be divided into two parts: natural and forced convection. In natural convection, the coolant fluid flow is caused by density variations resulting from temperature differences. In forced convection, the flow is assisted by external pump or blower. Convection and conduction always happens simultaneously. (Pyrhönen 2008, p. 470-472)

2.3.3 Radiation

Heat radiation is electromagnetic radiation. The wavelengths are 0.1-100 µm, which involve infrared, ultraviolet and visible light. Unlike convection or conduction, radiation does not require a medium. When heat radiation meets an object, part of the radiation is absorbed, part reflected back and part may transmit through the object. (Pyrhönen 2008, p. 466)

In thermodynamics, emitted power is usually calculated using the emissivity of a black object as follows:

$$q_s = \varepsilon \sigma T_s^4, \tag{10}$$

where ε is the emissivity of the material, σ is Boltzmann's constant $5.67*10^{-8}$ W/m^2K^4 and T_s is the temperature of the surface. The emissivities of some materials commonly used in electrical machines are shown in Table 2. (Lampinen 1997, p. 24)

Table 2. Emissivities of common materials in electrical machines. (Pyrhönen 2008, p. 469)

Material	Emissivity
Polished aluminium	0.04
Polished copper	0.025
Mild steel	0.2–0.3
Cast iron	0.3
Stainless steel	0.5–0.6
Black paint	0.9–0.95
Aluminium paint	0.5

2.4 Heat removal in electrical machines

In electrical machines, the design of heat transfer is important because the maximum winding temperature determines the maximum constant output power of the machine. Temperature control is particularly important in permanent-magnet electrical machines because an increasing temperature usually decreases the remanence of permanent magnets (Pyrhönen 2008, p. 396). Excessively high temperatures in the windings cause more Joule losses, but overheating can also be injurious for stator coil insulation. The operating temperature can have a dramatic effect on insulation life expectancy. A higher temperature does not necessarily lead to immediate failure, but it produces a gradual degradation of insulation. Insulation failures are critical because they result in machine to short out. Repairing shorted insulation is difficult, expensive or even impossible. Therefore, winding temperatures must be limited to avoid these failures and costly repairs. (Chapman 2005, p. 258-259)

In the range of temperatures usual for electrical machines, convection and conduction are the major heat transfer methods. In flange mounted electrical machines, also a considerable amount of heat is transferred through the flange. Heat transfer by radiation is minor but not irrelevant. The amount of heat transferred by radiation can be promoted by painting the surface of the machine black. The most efficient cooling method is direct liquid cooling, but it is also much more complicated and costly. The cooling water also removes heat by forced convection. (Pyrhönen 2008, p. 462 & 476)

2.4.1 Air cooling

In electrical machines, cooling is usually implemented by mounting a fan on the motor shaft. However, at low rotation speeds, a shaft-mounted fan may not produce enough air flow through the machine. Therefore, air-cooled low-speed machines need separate blowers. Also in high-speed machines, the shaft-mounted fan is not suitable since it produces noise and substantial losses. (Vukosavic 2013, p. 367)

To maintain a constant temperature in the machine, the total cooling power P_{cool} must exceed the electrical losses P_{loss}:

$$P_{loss} \leq P_{cool} \tag{11}$$

In air-cooled systems, the cooling flow is linearly proportional to the air velocity. Increasing the air velocity increases also the pressure differential *dp* because of increased friction. This is proportional to the square of the air velocity. As a result, the required fan power P_{fan} is proportional to the cube of the velocity of the air as follows:

$$P_{fan} \simeq w_{air} A_{cool} dp \propto w_{air}^3, \tag{12}$$

where w_{air} is velocity of air, A_{cool} is the flow area and *dp* is the pressure diffential. Figure 5 shows the required fan power as a function of generator power if the required fan power is 50 kW in a 4 MW generator. As can be seen, the required fan power increases quickly after 3 MW, which decreases the total efficiency of the generator. As mentioned previously, convection is a major heat transfer mechanism, as the air flow passes through the machine. Thus, cooling can be improved either by increasing the flow rate of the convective coolant or by improving the properties of the coolant. (Semken et al. 2012, p. 7)

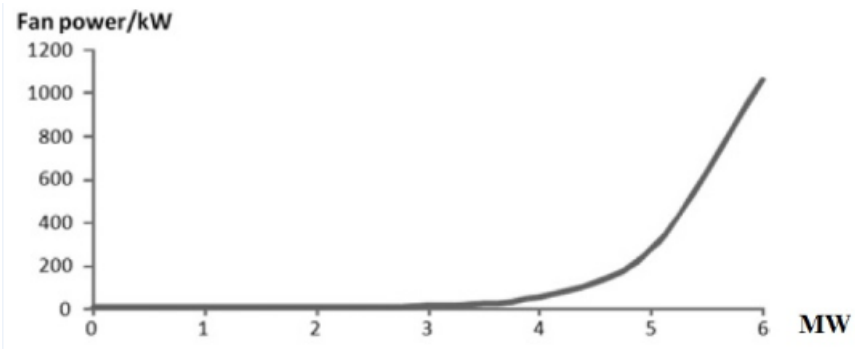

Figure 5. Required fan power as a function of generator power (MW) when the required fan power is 50 kW in a 4MW generator (Mod. Semken et al. 2012, p. 7).

2.4.2 Direct liquid cooling

The stator copper causes most of the losses in DD-PMSG. The winding conductors are made of copper, which has a thermal conductivity of 399 W/mK (Valtanen 2012, p. 367). The thermal conductivity of the electrical insulation is significantly lower. Consequently, the electrical insulation also insulates the conductor thermally. Heat flows freely along the copper conductor but not out of it. As a result, the most effective way to remove heat from coils would be cooling the copper directly. (Semken et al. 2012, p. 7)

The greatest difference between traditional air-cooled and DLC electrical machines is the structure of the coil. In a tooth coil architecture, the dimensions of the DLC coil are highly dependent on the coolant conduit. The minimum practical bending radius to which the coolant tube can be bent without deformation defines the tooth width. DLC is also more complicated than traditional air cooling. DLC windings are more difficult to manufacture and corrosion or loose seal can cause leaks. (Alexandrova et al, 2013 p. 1732-1734)

In addition to corrosion, stator windings are also subjected to mechanical vibration, electromagnetic stresses and thermal shocks during operation. Liquid-cooled stator windings also have a large number of fittings or soldered joints that can be potential sources of leaks. Leaks in the stator winding can affect insulation life and lead to costly repairs. (Worden & Mundulas 2001, p. 1-2)

In a traditional air-cooled low-speed DD PM generator, the maximum tangential stresses are usually 50-60 kPa and corresponding linear current densities 83-100 kA/m. Using direct

liquid cooling, it is possible to more than double the maximum linear current density, as can be seen in Table 3. In theory, the linear current density does not have an upper limit. It increases indefinitely when electrical current levels in the windings are increased. In practice, increasing the current level increases also resistive losses in the windings, which leads to thermal limitation. (Semken et al. 2012, p. 4)

Table 3. Linear current densities of synchronous machines using different cooling methods (Semken et al. 2012, p. 4).

	Air cooling	H_2 cooling	Direct water cooling
A (kA/m)	30 ··· 80	90 ··· 110	150 ··· 200

In DLC machines, the temperature of the coolant also has practical limits. According to an international standard for rotating electrical machines, the maximum coolant water temperature at the outlet of the windings is 90 °C (IEC 60034-1 2004, p. 44). In permanent magnet machines, it is especially important to avoid excessively high temperatures in the windings because heat radiates from the windings to the magnets, and the temperature of the magnets must be kept under certain limits to avoid demagnetizing. (Semken et al. 2012, p. 6)

2.5 A systematic approach to engineering design

To find good solutions to engineering problems, it is important to have a clearly defined design procedure that is flexible and can be planned, optimized and verified. To achieve the optimal solution, the designer must have the necessary information and work systematically. When using a systematic approach the designer does not have to contrive a good solution at the moment, but solutions can be systematically generated using certain steps depicted in Figure 6. (Pahl et al. 2007, p. 9 & 77)

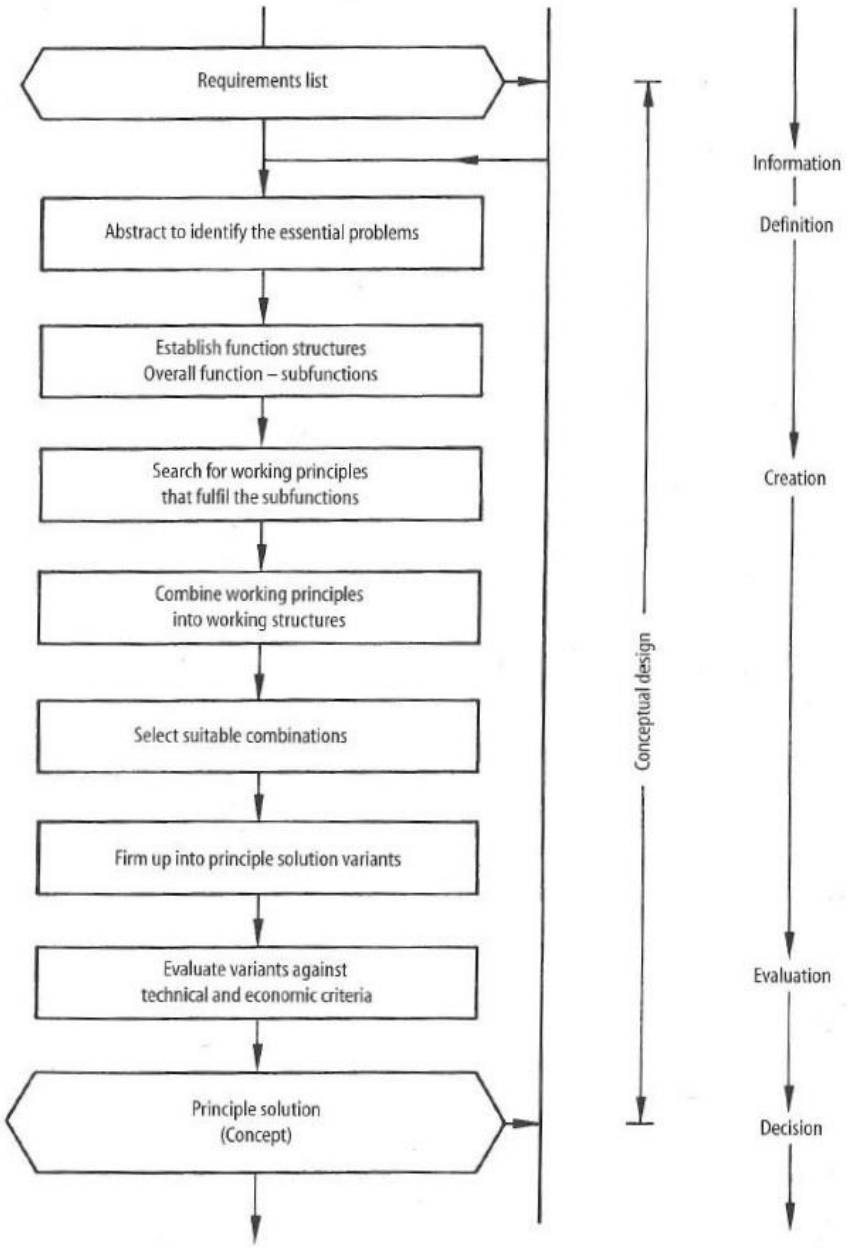

Figure 6. Steps of conceptual design (Pahl et al. 2007, p. 160).

2.5.1 Task clarification

The design task for a design and development department can be a proposal for a novel product or a development order. In either case, the design process starts with facing the problem. To solve the given task, cooperation between the designers and the client or proposer is needed. The basic information of the product, such as functionality and performance, should be explained in the task description. Predetermined solutions and decisions should be avoided if they are not necessary. To obtain a better understanding of

the requirements of the product, the designer has to know what features the product must and must not have and what requirements the solution needs to satisfy. Collecting information about the task and also about the existing constraints for each task helps the designer to achieve an optimal solution. The result of task clarification is the requirement list, which shows all of the requirements and wishes. (Pahl, Beitz 1990, p. 62-63)

2.5.2 Requirement list

When preparing the requirement list, the goals and restrictions must be generated. The resulting requirements are divided into either demands or wishes. Demands are requirements that need to be met under any circumstances. If the solution fails to fulfill even one of these requirements, it must be discarded. Wishes are requirements that should be fulfilled whenever possible. Small increases in cost may be acceptable if they achieve some advantages, for example less maintenance or easier assembly. Wishes should be categorized by importance: major, medium and minor. (Pahl et al. 2007, p. 146-147)

In the requirement list, the requirements are divided under different main headings. In large assemblies, the requirement list can be subdivided into smaller parts. Figure 7 shows a checklist for constructing a requirement list. (Pahl et al. 2007, p. 148-149)

Main headings	Examples
Geometry	Size, height, breadth, length, diameter, space requirement, number, arrangement, connection, extension
Kinematics	Type of motion, direction of motion, velocity, acceleration
Forces	Direction of force, magnitude of force, frequency, weight, load, deformation, stiffness, elasticity, inertia forces, resonance
Energy	Output, efficiency, loss, friction, ventilation, state, pressure, temperature, heating, cooling, supply, storage, capacity, conversion.
Material	Flow and transport of materials. Physical and chemical properties of the initial and final product, auxiliary materials, prescribed materials (food regulations etc)
Signals	Inputs and outputs, form, display, control equipment.
Safety	Direct safety systems, operational and environmental safety.
Ergonomics	Man-machine relationship, type of operation, operating height, clarity of layout, sitting comfort, lighting, shape compatibility.
Production	Factory limitations, maximum possible dimensions, preferred production methods, means of production, achievable quality and tolerances, wastage.
Quality control	Possibilities of testing and measuring, application of special regulations and standards.
Assembly	Special regulations, installation, siting, foundations.
Transport	Limitations due to lifting gear, clearance, means of transport (height and weight), nature and conditions of despatch.
Operation	Quietness, wear, special uses, marketing area, destination (for example, sulphurous atmosphere, tropical conditions).
Maintenance	Servicing intervals (if any), inspection, exchange and repair, painting, cleaning.
Recycling	Reuse, reprocessing, waste disposal, storage
Costs	Maximum permissible manufacturing costs, cost of tooling, investment and depreciation.
Schedules	End date of development, project planning and control, delivery date

Figure 7. Checklist for constructing a requirement list (Pahl et al. 2007, p. 149).

The list of requirements should include quantitative and qualitative aspects. Quantitative data contains numbers, such as weight, power, and volume flow. Qualitative data involves special requirements, such as corrosion resistance and waterproofing. All requirements should be defined as clearly as possible. The requirement list may also contain special information of important influences and procedures. The requirement list is never binding because it cannot be complete at the start of the project. It grows and changes during the design process. Since the requirement list is continually reviewed, it does not just show the initial position but offers an up-to-date document for all departments involved in the design process. (Pahl et al. 2007, p. 146-153)

2.5.3 Abstracting to identify the essential problems

The development of technologies, materials and manufacturing procedures can provide new, better solutions for design processes. However, a designer's experience and wish to minimize risks can cause prejudices and prevent using new technologies which could produce better but unconventional solutions. Abstracting is used to identify the essential parts of the task without adhering to any particular solution. The first step towards the solution is analyzing the functions and constraints on the requirement list in order to form the essential crux of the task. All of the wishes and demands that are not necessary, are not taken into account. The quantitative demands are transformed to qualitative data and the problem is formulated in solution-neutral terms. (Pahl et al. 2007, p. 161-165)

2.5.4 Establishing function structures

When the crux of the task is clarified, it is possible to formulate an overall function that shows the solution-neutral connection between the machine's inputs and outputs. This connection can be presented with a block diagram that should specify the connections between inputs and outputs as precisely as possible. If the relationship between the inputs and outputs is relatively complicated or the number of components is relatively large, the overall function can be broken down into sub-functions. (Pahl et al. 2007, p. 169-171)

When establishing function structures, it is necessary to separate adaptive design and original design. In adaptive design, the process starts from analyzing the function structure of the existing solution in order to generate an alternative solution. In original design, the function structure is based on the requirement list and abstracting. The functional connections and sub-functions can be recognized using demands and wishes. In modular assemblies the function structure affects highly on modules and their structures. (Pahl et al. 2007, p. 178)

2.5.5 Developing working structures

The next step is to search for working principles for the various sub-functions. The working principles should execute the required function and also fulfill the necessary constraints. The designer should generate not just one but several solutions for each sub function to create a solution field. One suitable way to present the sub-functions and appropriate solutions is a morphological matrix. By analyzing solutions for each sub-function, the designer can select

the most suitable working principles. The systematic combination of compatible working principles generates working structures. (Pahl et al. 2007, p. 181-185)

The working structures are usually not concrete and only the qualitative properties are known. To select the most suitable working structure, it is necessary to evaluate each solution using a selection procedure to discover the most promising solutions for each sub-function. The selected working structures proceed to the concretization process. (Pahl et al. 2007, p. 186)

Developing the working structures is especially important when creating an original design. The approach at this stage depends on the characteristics of the task, designer's capabilities and experience and the ideas from clients or proposers. In case of original design, the search for solutions should concentrate on determining the solutions for main function. (Pahl et al. 2007, p. 186-189)

Trying to concretize all of the working structures would be too laborious, so it is recommendable to identify only a few of the most promising working structures at a relatively low level of concretization. After the evaluation, the most promising one is selected for development to a higher level of concretization. (Pahl et al. 2007, p. 189)

2.5.6 Developing concepts

So far, the search for a solution has aimed at the fulfillment of a technical function. However, the concept must also satisfy certain general constraints related to safety, ergonomics, production and assembly, transport, operation, maintenance, expenditure and recycling (Pahl et al. 2007, p. 43-44). Before the evaluation process, the concept variants must be concretized and usually this phase demands significant effort. Sometimes reliable evaluation can be difficult because of gaps in information on important properties. In this case, the most important properties must be given rough qualitative and quantitative definitions. Rough estimations about important properties such as working principles, physical requirements and constraints must be known before the evaluation. Only the most promising combinations require detailed information. (Pahl et al. 2007, p. 190)

The first step of the evaluation is to identify the evaluation criteria. This phase is based on the requirement list. During the design process, new information might have emerged, so it is advisable to check whether the proposals still fulfill the demands on the requirement list. However, it is possible that the designer cannot be certain of all aspects, so the decisions must be made based on an estimation of how likely the requirements can be satisfied. In addition to the requirement list, also general technical and economic aspects should be considered. Evaluation criteria may not be equal, and consequently, the criteria should be weighted during the evaluation process. The evaluation process should concentrate on the main characteristics, ignoring the low-weighted characteristics and highlighting the extremely important demands. Figure 8 is lists some important issues that should be considered when performing a design evaluation. (Pahl et al. 2007, p. 191-193)

Main headings	Examples
Function	Characteristics of essential auxiliary function carriers that follow out of necessity from the chosen solution principle or concept variant
Working principles	Characteristics of the selected principle or principles with respect to simple and clear-cut functioning, adequate effect, few disturbing factors
Embodiment	Small number of components, low complexity, low space requirement, no special problems with layout or form design
Safety	Preferential treatment of direct safety techniques (inherently safe), no additional safety measures needed, industrial and enviromental safety guaranteed
Ergonomics	Satisfactory man-machine relationship, no strain or impairment of health, good aesthetics
Production	Few and established production methods, no expensive equipment, small number of simple components
Quality control	Few tests and checks needed, simple and reliable procedures
Assembly	Easy, convenient and quick, no special aids needed
Transport	Normal means of transport, no risks
Operation	Simple operation, long service life, low wear, easy and simple handing
Maintenance	Little and simple upkeep and cleaning, easy inspection, easy repair
Recycling	Easy recovery of parts, safe disposal
Costs	No special running or other associated costs, no scheduling risks

Figure 8. Checklist for design evaluation (Pahl et al. 2007, p. 193).

To ease the evaluation process, it is useful to list the identified evaluation criteria, including all the available quantitative and qualitative information. Then, all the variants are evaluated using for example a scale of 0-4. The evaluation can be executed from a technical and

economic point of view even though costs may be difficult to evaluate at this step. Once the points have been given, it is easy to determine the overall value using simple addition. If there is uncertainty in the evaluation, it is possible to determine the possible overall minimum and maximum points. (Pahl et al. 2007, p. 194-197)

Selecting the concept variants is fairly simple with an absolute value scale. One must simply compare the points of each variant to a theoretical ideal concept. Variants with a rating below 60 % of the ideal should be rejected. Variants with a rating of more than 80 % can be accepted for further improvement. Intermediate variants can only be accepted after the elimination of weaknesses. If two or more variants gain an equal score, the weaknesses and evaluation uncertainties should be reviewed more precisely. (Pahl et al. 2007, p. 197)

Estimating and defining evaluation uncertainties and determining their weaknesses is very important. Especially the uncertainties that influence the best concept variants must be eliminated. The whole concept may be compromised if an unexpected weak spot emerges at a later design phase. It is recommendable to estimate probability of possible risk before making important decisions. (Pahl et al. 2007, p. 197-198)

So far, the working principles and structures have been represented using rough sketches and calculations. In this phase, the best concept variants may be represented using CAD. All of the principle solutions and concepts must be documented unambiguously during the design process. Instead of creating the detailed design for the whole working structure, it is reasonable to focus only on the most relevant parts of the structure. It is also necessary to check if the existing and standard components can be used and which components need to be specially manufactured. (Pahl et al. 2007, pp. 198-199)

2.5.7 Embodiment design

The final part of the design process is embodiment design, in which the definitive detailed design is generated. At this stage, designers decide the overall layout design, materials and the manufacturing and assembly processes. In this phase, also the economic criteria should be taken into account. The design is continually critically evaluated and analyzed from the technical and economical points of view. Because of the evaluation, the design changes

many times, which requires significant effort before the final solution can be achieved. (Pahl et al. 2007, p. 227)

Drawing up a strict, detailed plan for the embodiment design phase is difficult because this phase is particularly laborious. Many processes are executed simultaneously, and also new information forces to repeat some operations, which might affect also other areas of the design. However, it is possible to take main working steps depicted in Figure 9 even though some problems might require unpredictable deviations and additional modifications. (Pahl et al. 2007, p. 228-229)

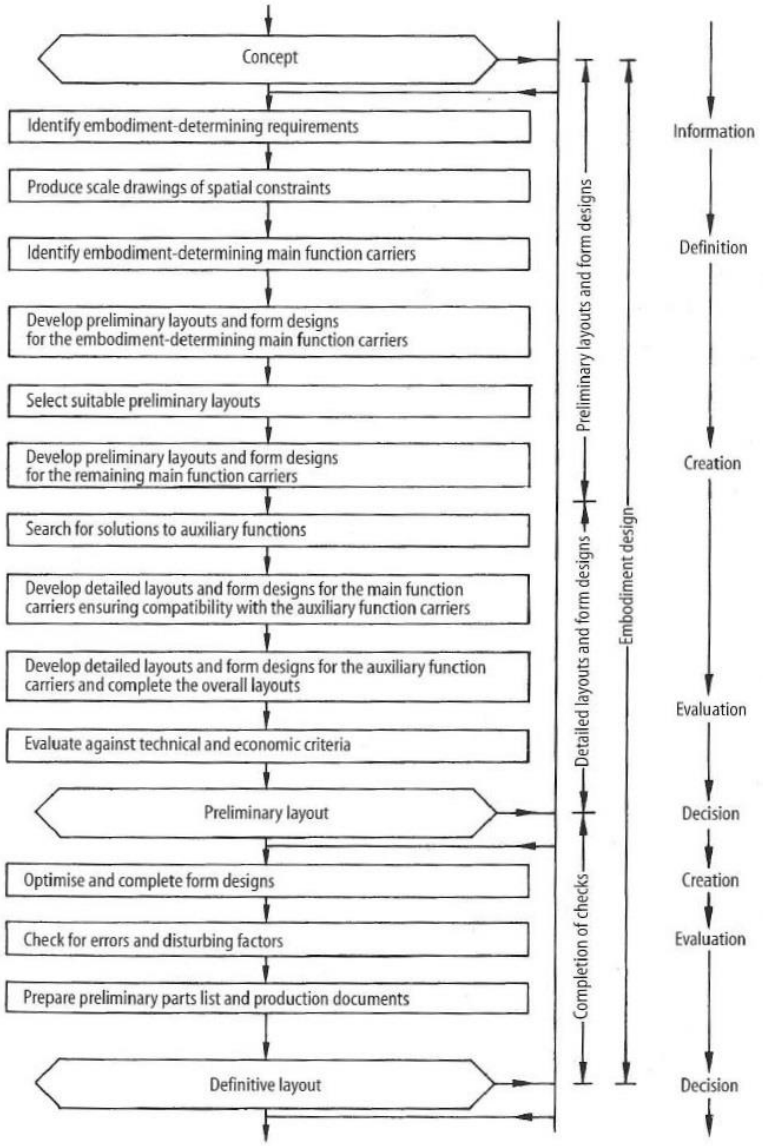

Figure 9. Steps of embodiment design (Pahl et al. 2007, p. 229).

2.6 Design for manufacture and assembly (DFMA)

DFMA is a design method of design to facilitate manufacturing and assembly. DFMA contains the terms DFM (design for manufacture) and DFA (design for assembly). (Boothroyd, Dewhurst & Knight 2002, p. 1) According to DFMA principles, the designer has to make sure that the product is functional and feasible, and take responsibility for manufacturability aspects already during the design process. (Eskelinen 2012, p. 6)

The target of DFMA is to improve efficiency in the production chain. DFMA offers a systematic method to analyze a design from the manufacturability perspective. This results in products that are simpler, more reliable, easier to manufacture and faster to assemble. The number of parts and tools needed in assembly is minimized. In addition to better products DFMA also improves quality and productivity. (Boothroyd, Dewhurst & Knight 2002, p. 21-22.) Moreover, it reduces lead times and makes it easier to meet the customer's requirements more rapidly. Also expensive redesign can be avoided when manufacturability is taken into account already during the design process. (Eskelinen & Karsikas 2013, p. 9)

Putting DFM into practice means paying attention to detail design to minimize the manufacturing time and costs. Make sure that tolerances and values for surface roughness are appropriate and use general tolerances if possible. If several different manufacturing methods can be used, select the one that requires the least preparations. Consider the rules of easy manufacturing for each manufacturing method. Ensure that the selected material is suitable for the manufacturing methods. Check the machining allowances, use only standardized tools and components and minimize the number of manufacturing stages. (Eskelinen, Karsikas 2013, p. 11)

Implementing the principles of DFA in the design process means simplification of the product structure. Designed structures should be modular and the number of different parts in assembly should be minimized. If possible, all of the parts should be assembled from the same direction and with the same tools. The parts should not be possible to assemble incorrectly or work only in a certain position. Make sure that there is enough space for tools and fasteners. (Eskelinen, Karsikas 2013, p. 11)

3 RESULTS

The design process of the coil tooling is accomplished using a systematic approach to engineering design. Because of the complicated structure of the coil, it is easier to form the coil in several stages: The first machine (coiler) is used to produce the duplex-helical configuration and the second machine (bender) to bend down the end of the coil. The third stage is to bend the coolant conduits at both ends of the coil. The designed machines will be discussed separately in the following chapters.

3.1 Design process of the coiler

At first, the requirements for the coiler are defined and listed on the requirement list. The requirements are divided into two categories: Demands (D) that are requirements that have to be met under all circumstances, and wishes (W) that are requirements that should be considered when possible. The requirement list for a coiler is shown in Table 4.

Table 4. Requirement list for coiler.

Main headings:	Specifications:	Demand [D] / Wish [W]
Geometry	- Includes a place for a spool - Movable at least with a pallet jack	D D
Kinematics	- Slow bending motions	D
Forces	- Required bending force 1000 Nm	D
Energy	- Electricity or pressurized air	D
Ergonomics	- Easy to use - Controls at the suitable height - Can be operated by one person	W D D
Assembly	- Easy and quick assembly	W
Operation	- Does not damage the insulation - Can produce coils with active length=750 mm	D D

Table 4 continues. Requirement list for coiler.

Maintenance	- Long maintenance interval - Simple maintenance - All parts easily replaceable - No special tools needed for maintenance	W W W W
Safety	- Does not put operator in danger - Fulfills machine safety standards	D D

The function structure for the coiler can be seen in Figure 10. The main function is to produce the multilayer duplex-helical form of the coil. It is divided into three sub-functions, which are holding the spool, straighten the cable, and bending the turns. The cable is delivered on the spool, which means that it is bent and has to be straightened before forming the coil. The bending radius of the cable on the spool is not constant, so the straightener must be adjustable. The coil includes three different bends: the inner column, the outer column, and the transition between the inner and outer columns. The three different bends can be seen in Figure 11.

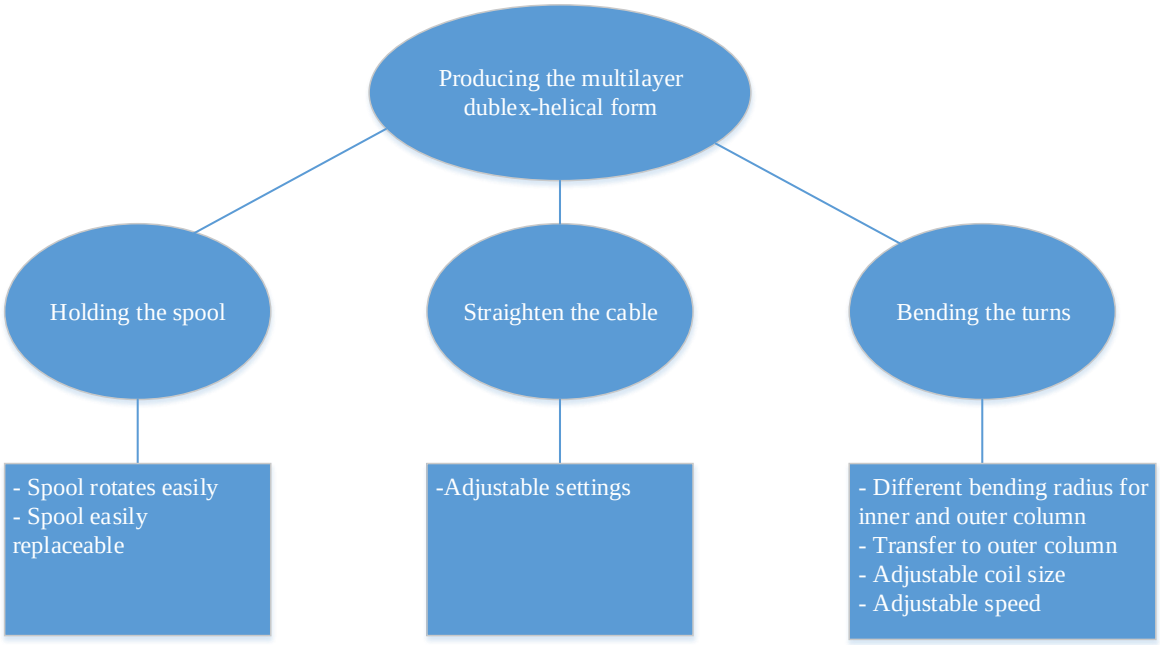

Figure 10. Function structure for the coiler.

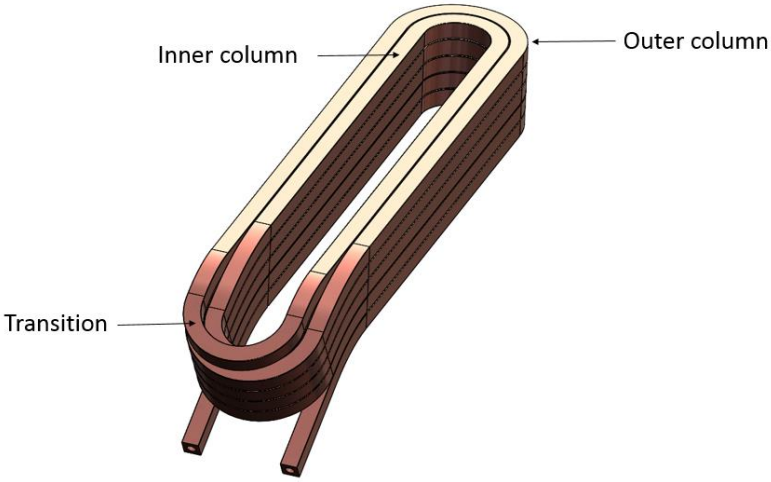

Figure 11. Three different bends of the coil.

In the function structure, the main function is divided into sub-functions and certain requirements that have to be fulfilled. The next step is to generate solutions for the sub-functions.

3.1.1 Spool stand

The cable is delivered on a spool, so it needs a stand where the spool can rotate easily. The dimensions and the weight of a spool might change, and therefore, the spool stand should fit all spool sizes. The requirement list for the spool stand is shown in Table 5.

Table 5. Requirement list for the spool stand.

Main headings:	Specifications:	Demand [D] / Wish [W]
Geometry	- Suitable for different spool sizes	D
Forces	- Can hold 1200 kg spool	D
Assembly	- Easy assembly	W
Operation	- Spool rotates freely - Spool can be replaced easily	D D
Maintenance	- No maintenance	W

Different solution variants for the spool stand are gathered in a morphological matrix in Appendix 1, which also presents the advantages and disadvantages of each variant.

Alternative 3 is chosen as the best since it is simple, easy to manufacture and works with any spool size with its telescopic legs.

Figure 12 shows the designed spool stand with a spool 1400 mm in diameter. The stand consists of two identical stands on each side of the spool. The stand is made of 60x60x4 mm S355 square tube parts which are welded together. The telescopic part is a 50x50x4 mm square tube (S355). Telescopic tubes allow the height of the tube center to vary from 1040 to 1700 mm. The height is locked using pins 12 mm in diameter. The spool rotates freely around round tubes with a 70 mm diameter, resting on U-shaped parts. The maximum width of the spool depends only on the length of the round tube. The spool in Figure 12 is 500 mm wide and with the current tube the maximum spool width is 1000 mm.

A spool full of cable is so heavy that it cannot be handled manually. The spool is easily replaced by lifting it to the right height with a forklift or a crane, sliding the round tube through the center hole and setting the stands under it at the right height.

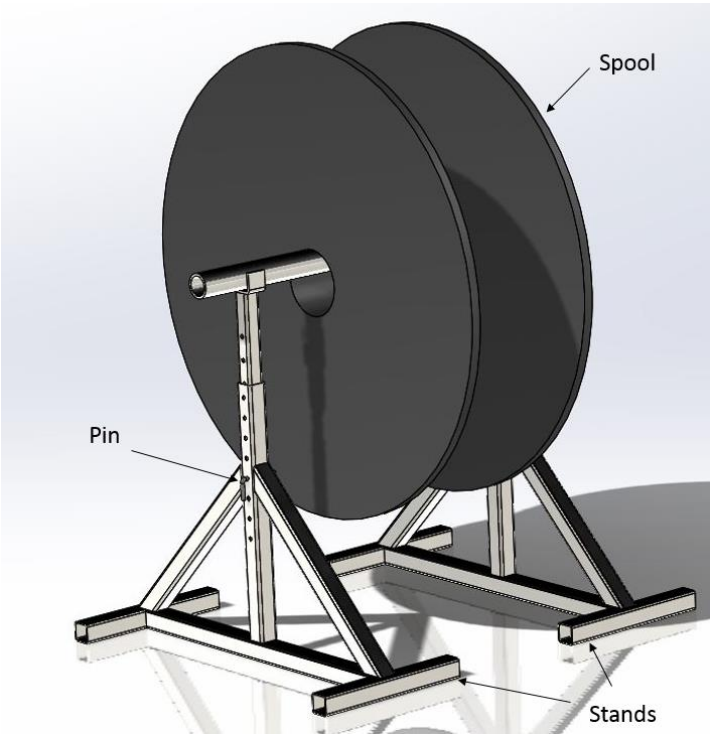

Figure 12. The designed spool stand with a spool.

3.1.2 Straightener

The cable on the spool is already bent, which is why the cable must be straightened before forming the coil. The bend radius of the cable is not constant, and consequently, the straightener must be adjustable. It is clear that the straightening process should not cause any damage to the insulation.

Figure 13 illustrates the designed straightener and its cross-section. The straightener applies a simple roll forming method. The middle roller can be moved up and down ±20 mm depending on the bent radius of the cable. The adjustment is based on threaded rod M10. Rollers are SKF 61908 ball bearings. To protect the insulation from tearing, there are nylon plates on both sides. The designed straightener has a simple stand made of RHS 60x40x4 to raise it to the same level with the coiler. The stand must be connected to the coiler to prevent it from falling when the coiler pulls the cable through the straightener. The stand also has a flat plastic plate as a “table” right after the straightener where the straightness of the cable can be observed. Figure 14 shows the straightener and the stand.

At the beginning, the straightness of the cable after the straightener is checked visually and the adjustment will be manually operated. If the prototype of the straightener is feasible, the straightness measurement and straightener adjustment can be automatized.

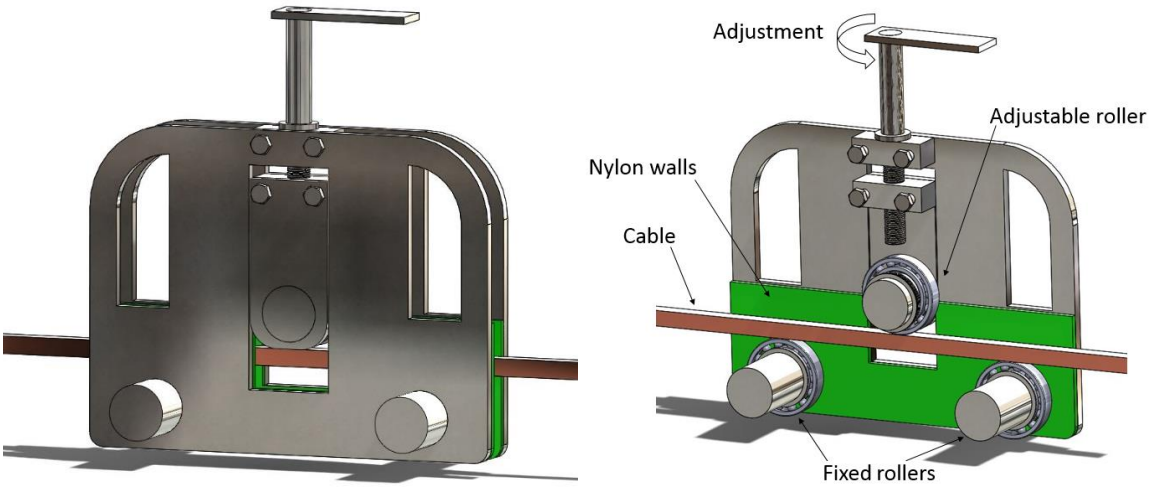

Figure 13. The designed straightener and its cross-section.

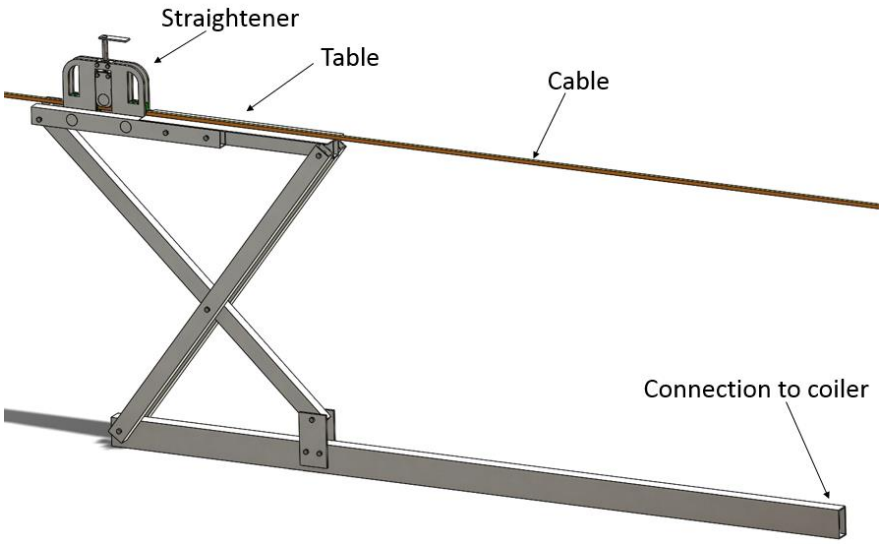

Figure 14. The designed straightener and the stand.

3.1.3 Working principle of the coiler

Alternative operation solutions for the coiler are gathered in a morphological matrix which can be seen in Appendix 2. Alternative 2 is clearly more feasible, and therefore, it is selected. In this alternative, the coil is formed around two bender dies which change their place using horizontal movement between every bending movement. The pivot point is concentric to the bender die during the bending, enabling the roller die to be fixed.

To carry out the horizontal movement, it is necessary to have a linear guide. The maximum stroke of the linear guide defines the maximum length of the coil that can be manufactured. Determining the length of the coil is shown in figure 15. In Figure 15, r is the radius of the end bend, A_L is the active length of the coil and E_p includes the thickness of the end plate of the stator stack and 5 mm extra to ease the assembly. For the proof-of-concept prototype machine, the active length is 284 mm, E_P=20 mm and r=30 mm. Thus the total length of the coil is 384 mm. Radius r also defines the radius of the bender dies, making the center distance between the dies 324 mm.

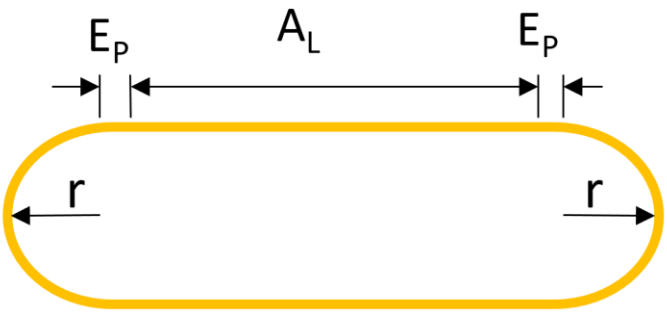

Figure 15. Defining the coil length.

The linear guide shown in Figure 16 includes a carriage, end blocks, shafts and four linear bushings. Based on the manufacturer's recommendation, the selected linear guide has precision steel shafts with a 50 mm diameter and tolerance grade h6. The carriage and the end blocks are made of aluminum.

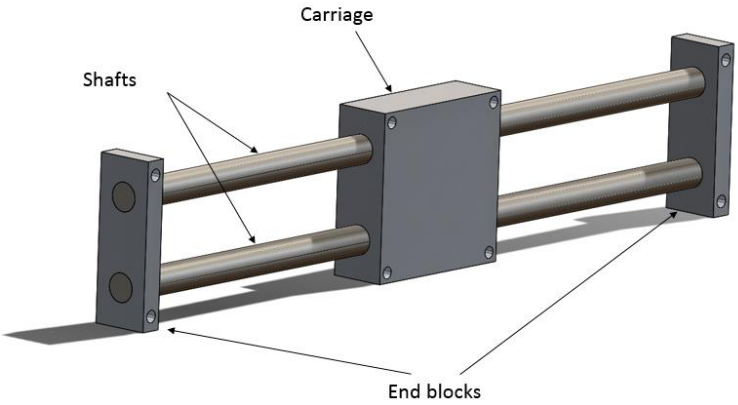

Figure 16. Linear guide

The coil is formed around two bender dies which are attached to the end blocks of a linear guide. The carriage of the linear guide is mounted on the end of the main shaft (pivot point). By rotating the main shaft, the carriage and the whole linear guide rotates. The necessary horizontal movement is accomplished by moving the end blocks horizontally. Table 6 shows the principle of the bending process step by step.

Table 6. Working principle of the coiler.

Step 1. The start point. The cable end is attached.	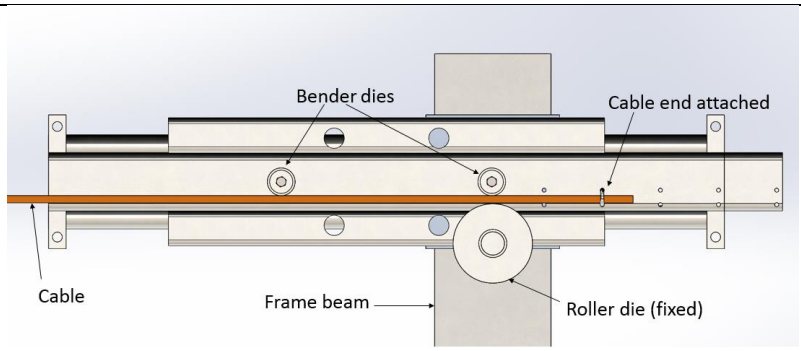
Step 2. Horizontal movement. Insert the support to hold the cable in the right place. Horizontal movement is also used to pull the cable through the straightener.	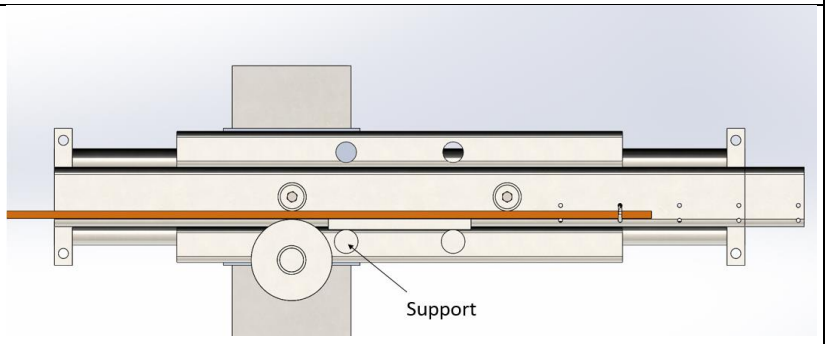
Step 3. Starting the first bend by rotating the linear guide around the pivot point, which is concentric with the bender die and the main shaft.	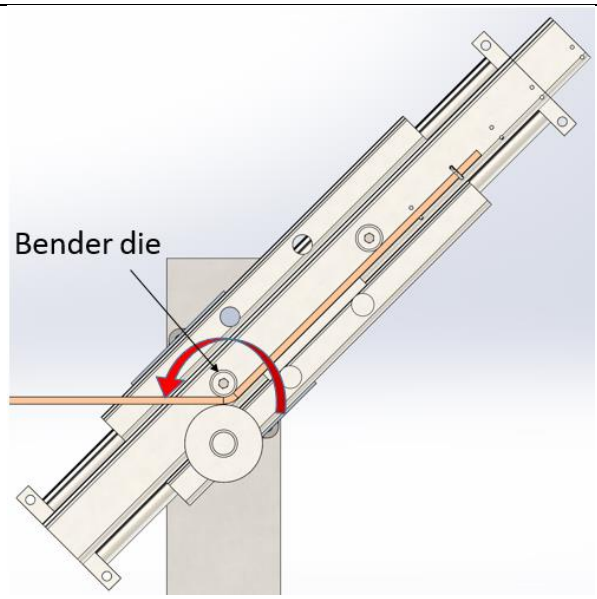

Table 6 continues. Working principle of the coiler.

Step 4. The first 180° is done.	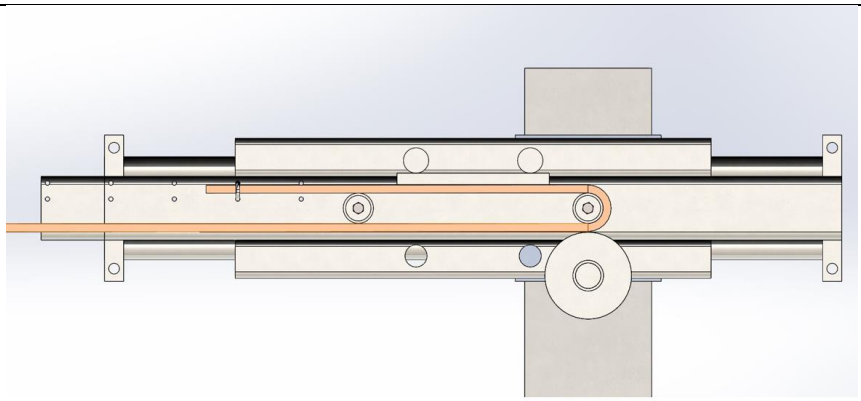
Step 5. Overbending to compensate for the springback effect.	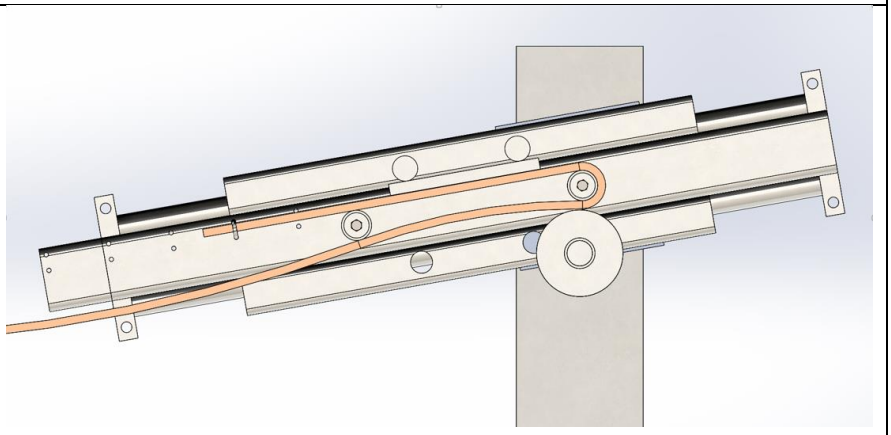
Step 6. Return to the horizontal position. The first bend is completed.	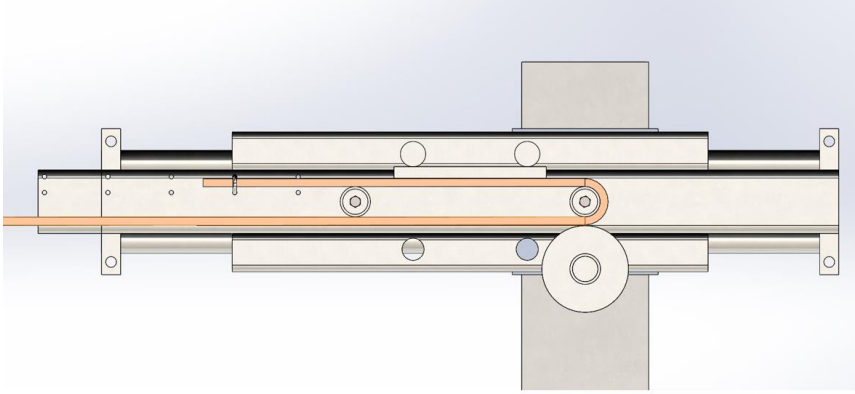

After the sixth step there is again horizontal movement to the other end. After the support is moved to the opposite side, the next bend can be made.

3.1.4 Horizontal movement

Alternative solutions for producing horizontal movement are shown in Table 7. The different solutions are reviewed in terms of force, accuracy, feasibility and price. Table 7 displays the advantages and disadvantages. As can be seen, both the hydraulic cylinder and the electric ball screw face the same problem: how to bring the energy to the rotating part.

Table 7. Horizontal movement

	Advantages:	Disadvantages:
Hydraulic cylinder	- A great deal of force - Enough accuracy can be achieved using a mechanical limiter - Cylinders are relatively low-cost but also need a pump, valves, etc.	- It is complicated to bring the oil conduits to the rotating part - Needs also a pump and valves, which raises the total price
Rack and pinion	- Simple, relatively low-cost	- Clearance between the rack and pinion might reduce accuracy
Electric ball screw	- Can be integrated into the linear guide module - Very accurate	- The motor must be in the rotating part, and bringing the wires there is complicated

With a rack and pinion, it is possible to use two concentric shafts: the inner shaft (main shaft) to rotate the carriage and the whole linear guide and hollow shaft around the main shaft to rotate the pinion. Figure 17 illustrates the structure:

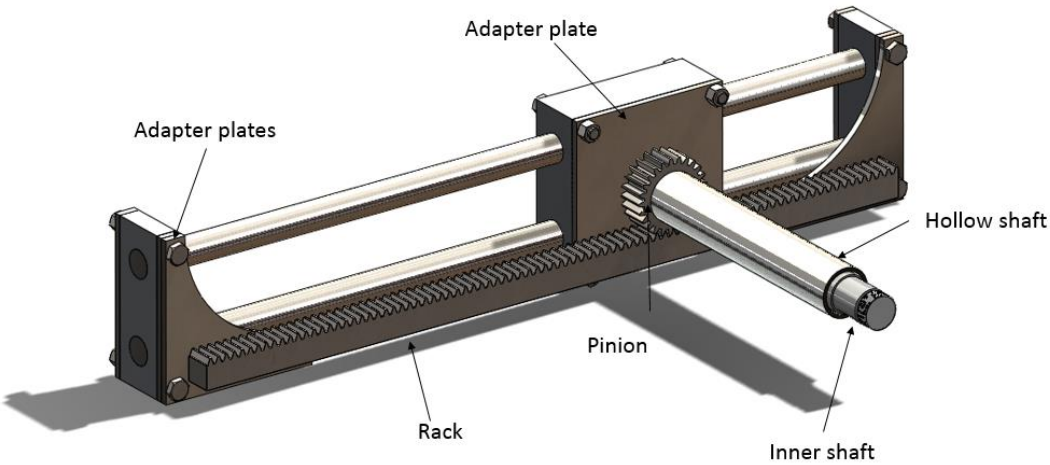

Figure 17. Linear guide with shafts and rack and pinion.

The rack is attached to the end blocks of the linear guide using adapter plates and two M16 screws, and the pinion is welded on the hollow shaft. The inner shaft is welded to the adapter plate, which is attached to the carriage with four M16 bolts.

3.1.5 Shafts and bearings

On both sides of the frame beam, there are SKF FYJ75 ball bearings which hold the hollow shaft. The bearings have set screws to stop the axial movement of the shaft. At both ends of the hollow shaft, there are flanged plain bearings which hold the inner shaft. Figure 18 displays the bearing configuration and Figure 19 the exploded view.

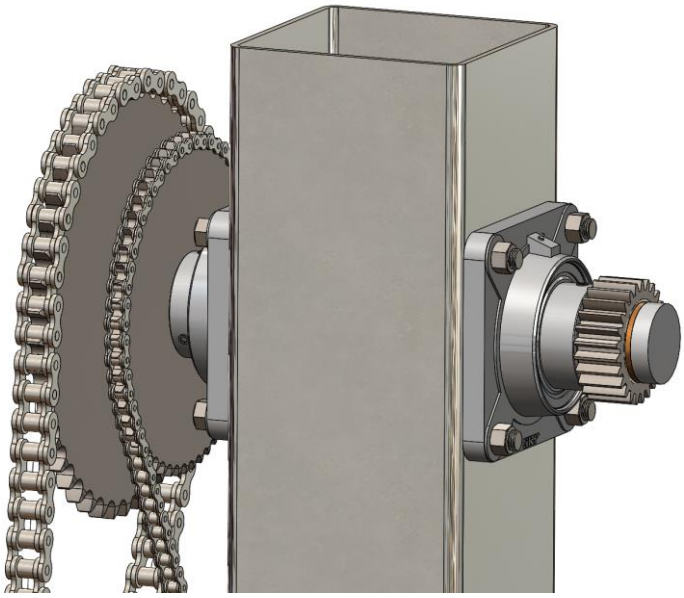

Figure 18. Bearings, shafts and sprockets assembled.

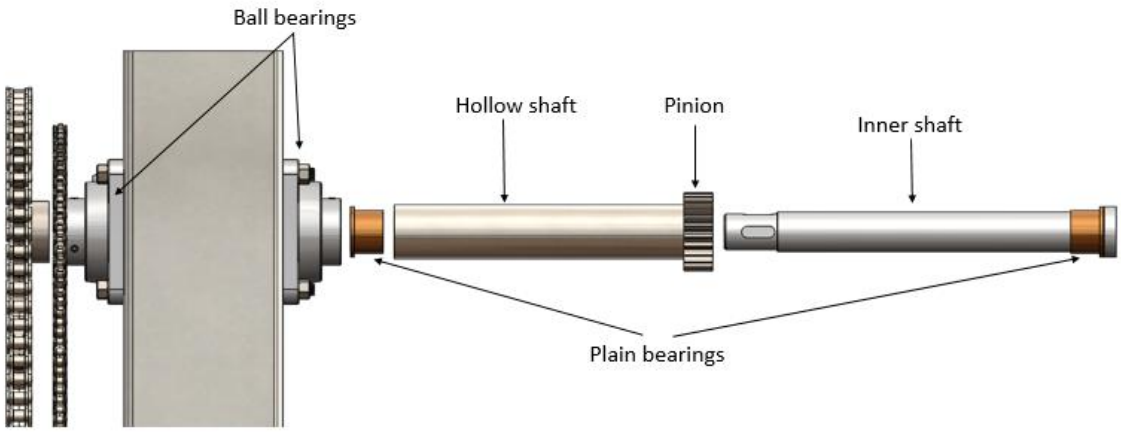

Figure 19. Exploded view of the shaft configuration.

The diameter of the inner shaft is calculated using Söderberg's method (Airila et al. 2003, p 327) for a shaft with constant torque and changing bending. The calculation is shown in Appendix III. The result of the calculation is that minimum diameter of the inner shaft is 49.4 mm. The sprocket is mounted on the shaft using a key. The calculation for the length of the keys is shown in Appendix IV. The sprocket has a set screw to prevent axial movement. The sprocket and the pinion must be welded on the hollow shaft because the wall thickness of the hollow shaft is less than 10 mm, which is not enough for making keyways.

3.1.6 Forming the coil

As mentioned previously, the coil is formed around two bender dies. The radius of the bender die determines the inner radius of the bend. To prevent coolant conduit from kinking, it is also necessary to support the cable from both sides during the bending. As Table 6 shows, it is also necessary to compensate for the springback effect by overbending each turn. Because of the overbending, the outer column must be done aside from the inner column.

Figure 20 shows the designed bender dies for the proof-of-concept machine's coils and a picture of the coil on the bender dies. The coil is formed around the dies so that every other layer is an inner column and every other an outer column. However, to get the finished coil out of the machine, bender dies must be dismountable.

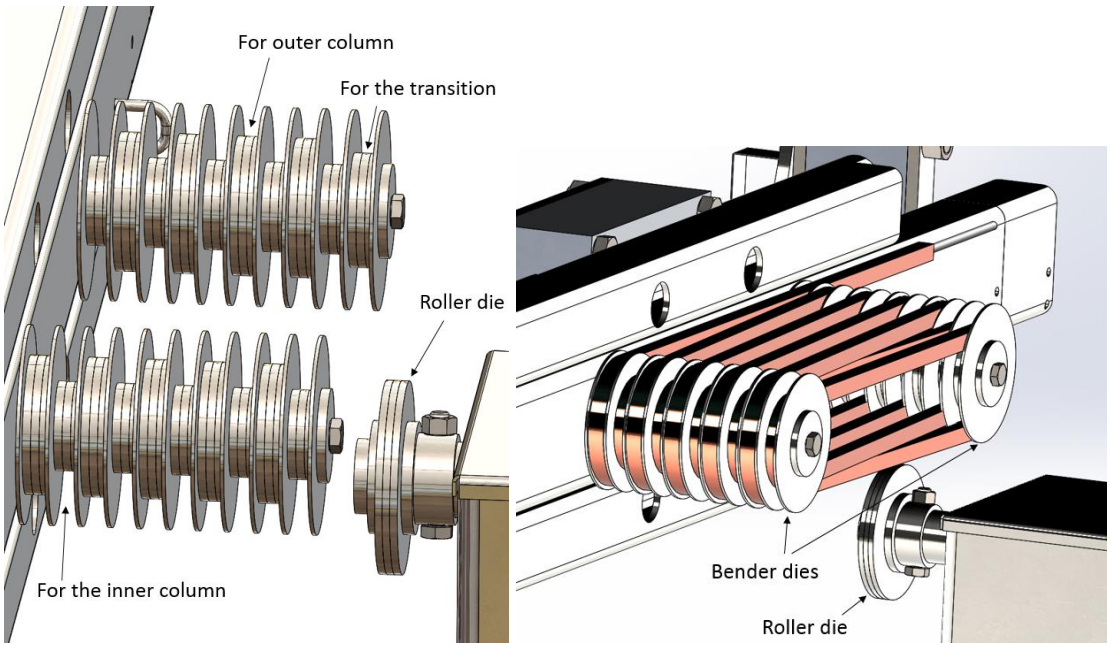

Figure 20. Designed bender dies and the coil after all the bends are done.

To illustrate the structure of the bender dies, the exploded view of one die is shown in Figure 21. The bender dies consists of a shaft 40 mm in diameter, and around it there is a bunch of laser cut rings. The outside diameter of the rings determines the bend radius of the coil. Between every coil layer there are larger rings as “walls” to support the cable from the sides. At the end of the shaft there is an end plate and an M10 screw to hold the bunches in the right place.

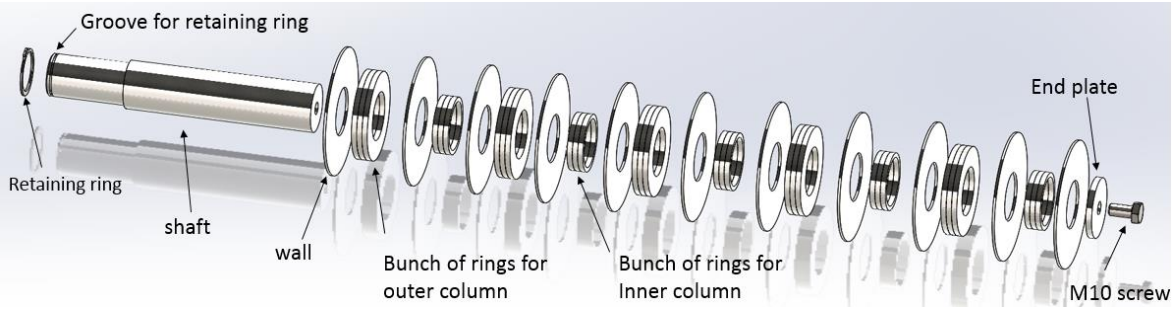

Figure 21. Exploded view of one bender die.

The cable bends between the bender die and roller die. Because of the different radiuses between the inner and outer column, two roller dies are needed. Like the bender dies, the roller die consists of a bunch of laser cut steel rings that can rotate freely around a tube. The tube is locked on the shaft using an M8 screw to enable the quick replacement of the roller die. The shaft inside the roller die can be moved back and forth, enabling the axial movement of the roller die during the coil manufacturing process. To prevent the displacement of the shaft and roller die during the bending, it is necessary to lock the shaft in place. Therefore, there is a grooved latch that facilitates setting the shaft in the right place for bending. The structure of the roller dies and the latch is shown in Figure 22.

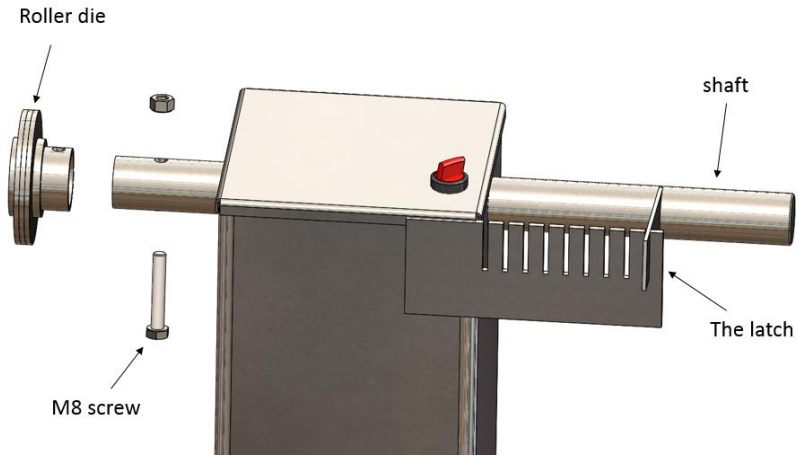

Figure 22. Structure of the roller die system.

When all the bends are done, the coil can be removed from the machine by unscrewing the M10 screws from the end of the bender die as shown in Figure 21. The left side of Figure 23 shows an illustrated coil right after the coiling process. As can be seen, there is a great deal of empty space between the layers because of the structure of the bender dies. After the coil is removed from the machine, it can simply be pressed down, and it will be ready for producing the end bends.

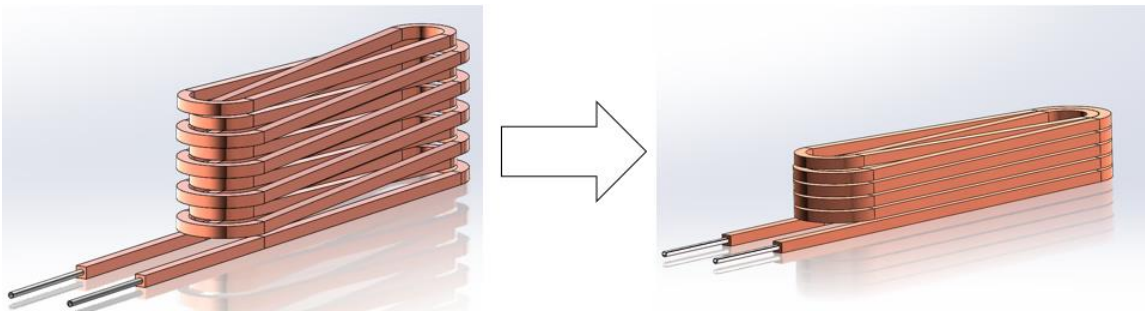

Figure 23. Coil right after forming and when pressed down.

3.1.7 Power sources and transmission

The necessary power for both bending and horizontal movement can be produced using electric motors or pressurized air or hydraulics. Table 8 compares different power sources. In the comparison, all the alternatives are compared to each other in terms of force, controllability, accuracy and costs. The best option scores three points and the worst one point. As can be seen, the electric motors are the most suitable for this application. It is possible to use either a servo motor or a stepper motor. Servo motors would be more accurate

but also significantly more expensive than stepper motors, especially when the required torque is this high (1000 Nm). However, the stepper motor does not know its position, which makes it necessary to use sensors to figure out the right starting position and limit the movements.

Table 8. Different options power source.

	Importance	Electric motor	Hydraulic motor	Pressurized air
Force	0.4	2	3	1
Controllability	0.2	3	2	1
Accuracy	0.2	3	2	1
Costs	0.2	3	1	2
Results:	**1**	**2.6**	**2.2**	**1.2**

As mentioned previously, two stepper motors are needed: one for the bending movement and another one for horizontal movement. Selecting the motor for bending movement is a compromise between torque and price. With these criteria, the Chinese Nema 51 stepper motor is selected. Since the price is reasonable, it is rational to buy two identical motors. As can be seen in Appendix V, the motor can produce a maximum torque of 50 Nm at 9 rpm. It also has a holding torque of 50 Nm so it can easily keep the linear guide stationary during the horizontal movement. The Nema 51 stepper motor and its driver are shown in Figure 24.

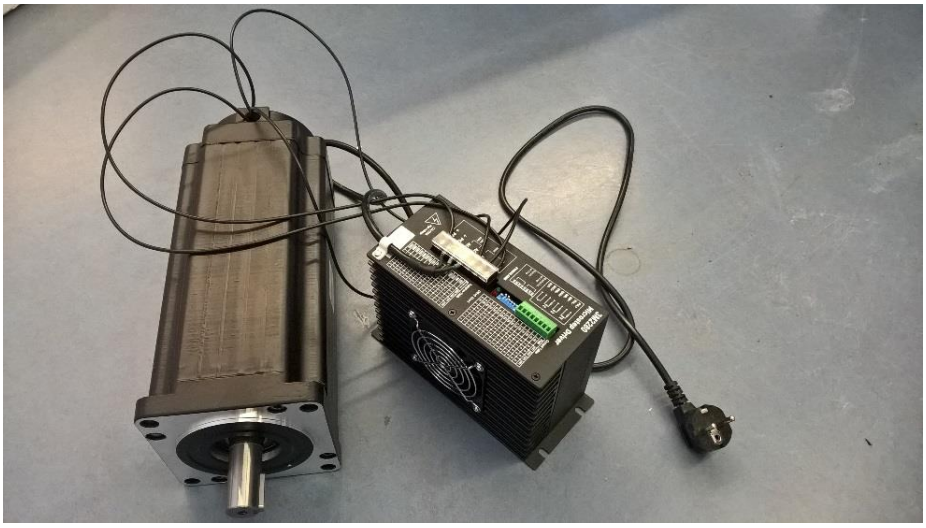

Figure 24. Nema 51 stepper motor and driver.

The transmission is needed to reduce the rotating speeds of both bending and horizontal movements. The suitable rotation speed for bending movement was earlier estimated to be 5-10 seconds per 180° to give the user enough time to control the process. The horizontal movement should be 40-80 mm/s because the same movement pulls the cable through the straightener. Slow motion allows the user to have enough time to monitor the straightness of the cable and make the necessary adjustments since there is no automatized measurement and adjustment for straightness at least at the beginning.

Table 9 shows the different options for transmission. Again, variants are compared to each other in terms of size, the need for maintenance, costs and the possibility to change the gear ratio afterwards, since the suitable rotation speeds for bending and horizontal speed of the rack are just estimations. As can be seen, using chains and sprockets seems to be the best solution.

Table 9. Different options for transmission.

	Importance	Gearbox	Chain and sprockets	Belt and pulley
Size	0.2	3	2	1
Need for maintenance	0.2	2	1	3
Costs	0.3	1	3	2
Possibility to change gear ratio afterwards	0.3	1	3	2
Results:	**1**	**1.6**	**2.4**	**2**

If only one pair of sprockets was used, it would require a 1:20 gear ratio to achieve the targeted 1000 Nm bending torque. Using chain transmission, it is possible to achieve a gear ratio this large, but the larger sprocket will be custom-made and expensive. Therefore, it is reasonable to use two pairs of sprockets and a layshaft. The selection of chains and sprockets for bending is shown in Appendix VI and the selected chains and sprockets are shown in Table 10.

The horizontal movement of the carriage is also accomplished using identical stepper motors and chain transmission. The suitable horizontal speed was estimated to be 40-80 mm/s. The selection process of chains and sprockets is shown in Appendix VII. The rack and pinion were selected from a manufacturer's catalog based on the wanted speed of the rack and torque on the hollow shaft. Table 10 displays the selected chains, sprockets, pinion and rack.

Table 10. Selected chains, sprockets, pinion and rack.

	Bending	Horizontal movement
Sprocket on the motor shaft	Z1=11, chain (5/8")	Z1=11, chain (5/8")
Sprockets on the layshaft	Z2=70, chain (5/8") Z3=11, chain (1")	
Sprockets on the main shaft	Z4=45, chain (1")	Z2=57, chain (5/8")
Pinion		Z=25, module 4
Rack		module 4

Chains always stretch over time, which is why either a tensioner is needed or at least one of the sprockets must be moveable. The Nema 51 stepper motors are flange-mounted, making it easy to move both motors using long holes in the motor support, as shown in Figure 25. The support will be welded to the side of the vertical frame beam.

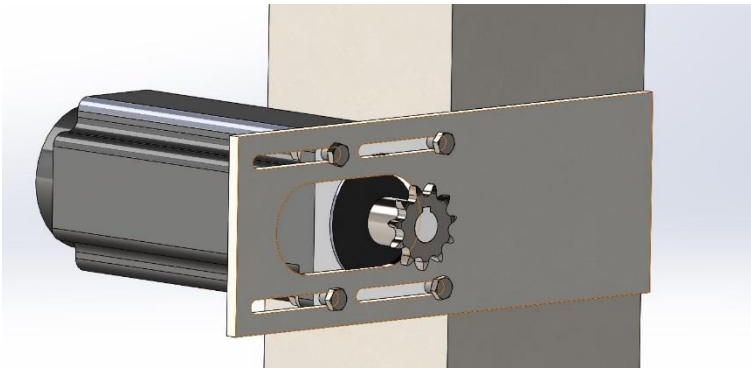

Figure 25. Flange mounting of the Nema 51 stepper motor.

The layshaft is mounted on top of a square beam that is welded to the side of the frame beam. Both beams are the same size (220x220x6 mm). At the same time, the frame beam under the layshaft provides a safe place for drivers of the stepper motors. Since the main shaft cannot be movable, it is necessary to be able to move the layshaft to tighten the 1" chain. This is

accomplished using long holes in the beam so the SKF SY 35 FM bearing units can be moved. Figure 26 shows the whole power transmission system.

The diameter of the layshaft is calculated in the same way as the inner shaft, and the calculations are shown in Appendix VIII. The result is that the minimum diameter of the layshaft is 30.3 mm, and consequently, the 35 mm diameter is selected. Both sprockets are attached to the layshaft using keys because the sprockets must be easily replaceable in case the gear ratios need to be changed afterwards. The axial movement of the layshaft is prevented using bearings with set screws.

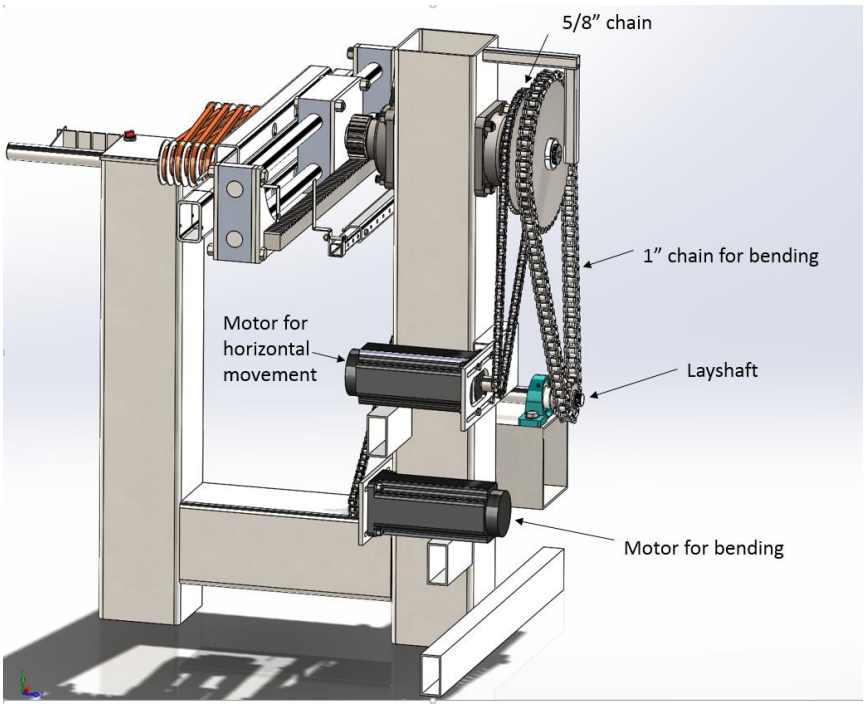

Figure 26. The power transmission

With the selected sprockets, the rotating speed of the main shaft is 3.2 rpm. In other words, one 180° turn takes 9.4 seconds. If the necessary overbending is assumed to be 20°, it will take 2.1 seconds to complete the overbending and return to the horizontal position. The speed of the rack is 60.6 mm/s and the necessary horizontal movement for the prototype coils is 324 mm. Consequently, the horizontal movement will take 5.3 seconds. The coil has 20 turns and thus the total time for all 20 turns of the coil is 5 min 36 seconds.

3.1.8 Controlling the motors

The motors are controlled using an Arduino microcontroller, which controls the drivers of the stepper motors. As mentioned previously, the stepper motor does not know its position, making it necessary to use sensors to figure out the right starting position and limit the movements. The rotation angle of the linear guide is easy to measure from the free end of the main shaft using a magnetic position sensor and a magnet mounted on the end of the shaft. The horizontal place of the linear guide is measured using a magnetic reed switch and a magnet mounted on the linear guide. Figure 27 shows the places of the sensors.

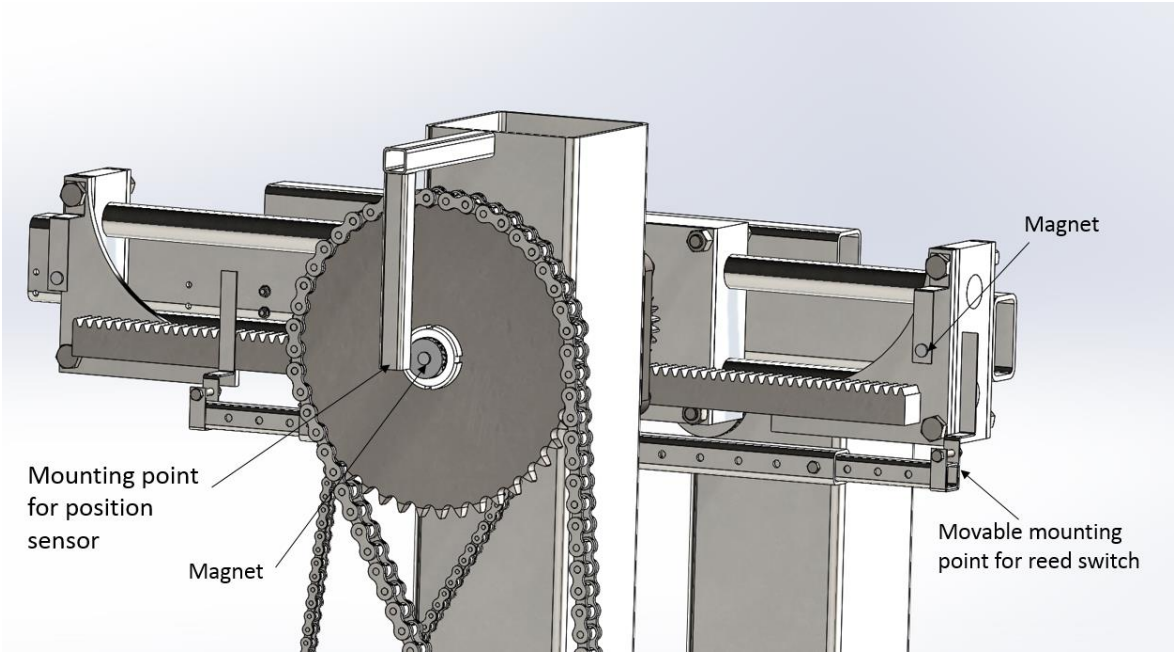

Figure 27. Sensors and magnets

The coiler is operated by using only one three-position self-centering switch. This leaves users one hand free to guide the cable to the next slot in the bender die. With the switch, the user can either execute the next movement or go back to the previous movement. The self-centering switch makes the machine safer for the user since the machine stops when the switch is released.

3.1.9 Machine safety

According to the machine safety standard SFS-EN 349, the moving parts of the coiler generate a risk for the user’s hands and legs, which might be crushed between the chains and sprockets. To avoid this situation, it is necessary to cover the power transmission with simple

sheet metal covers shown in Figure 28. The covers hide all of the sprockets and chains and they are quickly removable for maintenance, such as lubrication of the chain. The rest of the moving parts move so slowly that they do not endanger the user.

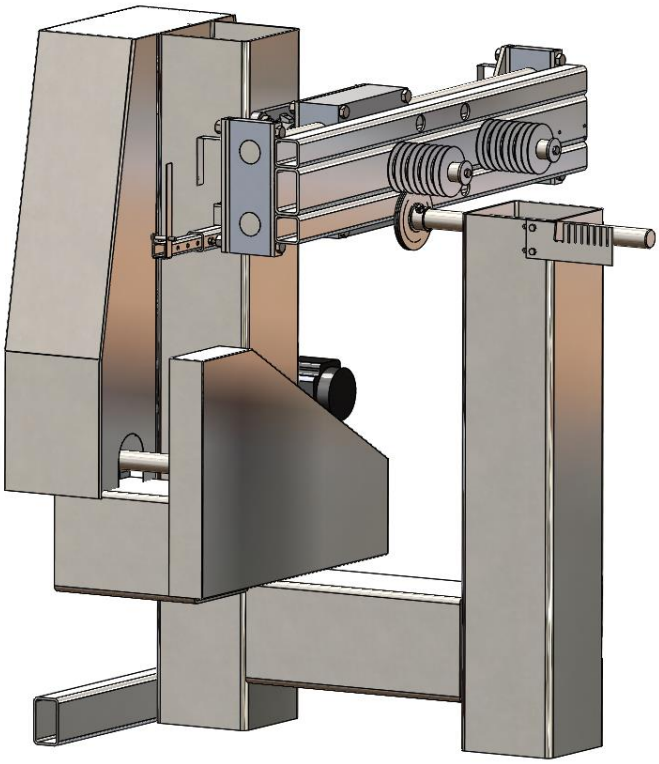

Figure 28. Coiler with chain covers on.

3.2 Design process of the bender

At the end of the coil, there are three bends. All of the coil layers are bent down 30° and the coolant entrance and exit tubes are also bent down 60°. In addition, there is an offset bend in the coolant exit tube to create enough space for fittings, as can be seen in Figures 2 and 3. All different bends at the end of the coil are shown in Figure 29.

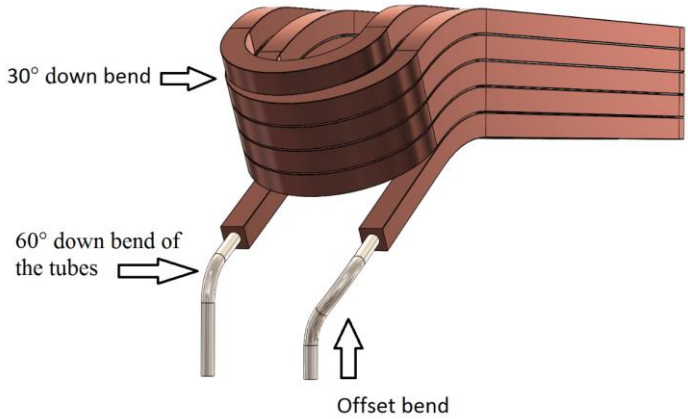

Figure 29. The down bends at the end and the offset bend.

The requirements for the bender are defined and listed on the requirement list that is shown in Table 11. The requirements are divided into two categories: Demands that are requirements that need to be met under all circumstances, and wishes that are requirements that should be considered whenever possible.

Table 11. Requirement list for a bender.

Main headings:		Demand [D] / Wish [W]
Force	- Enough force to make the bends	D
Energy	- Electrical, hydraulic or mechanical energy	
Ergonomics	- Simple to use	D
Assembly	- Easy and quick assembly	W
Operation	- Does not damage the insulation - Adjustable to different bend radiuses - Adjustable to different coil sizes	D D W
Maintenance	- No daily maintenance required	W
Safety	- Does not put operator in danger - Fulfills machine safety standards	D D

The function structure for bender is generated based on the requirement list. The function structure can be seen in Figure 30. The main function is to finalize the form of the coil after the duplex-helical form is achieved using the coiler. The main function is divided into three sub-functions, which are creating the end bends, the offset bend and bending down the tube ends. The place of the end bend should be adjustable so that the active length of the coil can be maximized. The offset bend is needed to create enough space between two adjacent coils for the fittings, as can be seen in Figure 3. Finally, the down bend of the coolant tubes is required to steer the tubes towards the center manifold. The radius of down bends of the tubes is dependent on the end bends. Together these two radiuses are 90°.

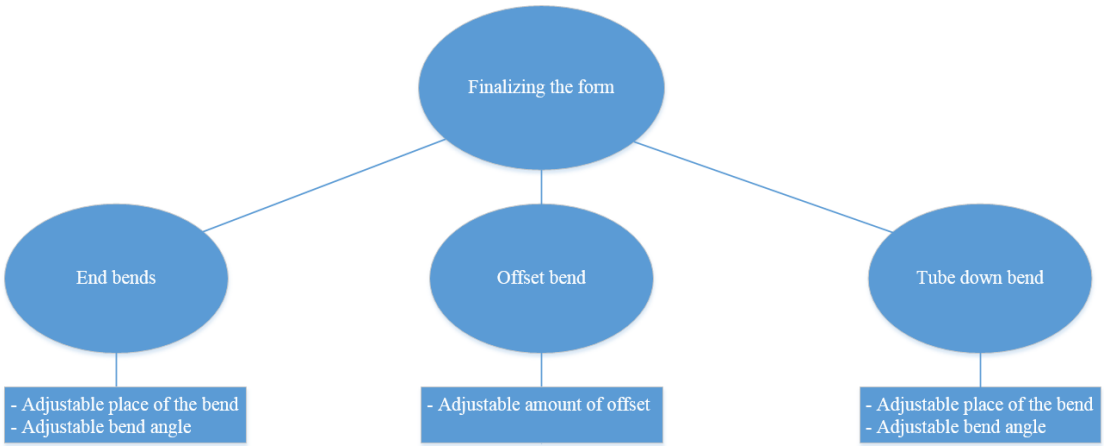

Figure 30. Function structure for the bender.

In the function structure, the main function is divided into sub-functions and certain requirements that have to be fulfilled. The next step is to generate several possible solutions for the sub-functions. All the three sub-functions require force, which can be produced using hydraulics, pressurized air or manual labor. Table 12 compares different sources of power for making the end bends. In addition to force, also usability, speed and costs are compared.

Table 12. Compare of power source variants for end bends.

Feature:	Importance	Hydraulic cylinder	Air cylinder	Manual work
Force	0.5	3	2	1
Usability	0.2	3	2	1
Speed	0.1	2	3	1
Costs	0.2	1	2	3
Result:	**1**	**2.5**	**2.1**	**1.4**

Making the end bends requires a great deal of force. Therefore, it has the highest importance in the comparison. The required force rules out manual operation. The usability of hydraulics and pressurized air is equal, but air cylinder is faster than the hydraulic cylinder and also less costly when using shop air. According to Table 12, the hydraulic system is the most suitable for making the end bends.

Table 13 compares different power sources for making an offset bend and tube down bend. In both cases, the criteria are the same as earlier except force is not rated since required force for bending just one or two tube is so small that all variants are applicable. Based on the comparison in Table 13, the tube bends are made manually.

Table 13: Comparison of solution variants for offset bends.

	Importance	Hydraulic cylinder	Air cylinder	Manual work
Usability	0.3	3	3	3
Speed	0.3	1	3	3
Costs	0.4	1	2	3
Result:	**1**	**1.6**	**2.6**	**3**

3.2.1 Producing the end bend

As Figure 29 previously showed, all of the layers at the other end of the coil are bent down 30°. Figure 31 shows the bottom of the coil. As can be seen, the bent radius is not identical in all columns. The bend radius of the cable ends is 109.08 mm and 23.75 mm in the other two. Because of this difference, the bender must also have two different sizes of bender dies.

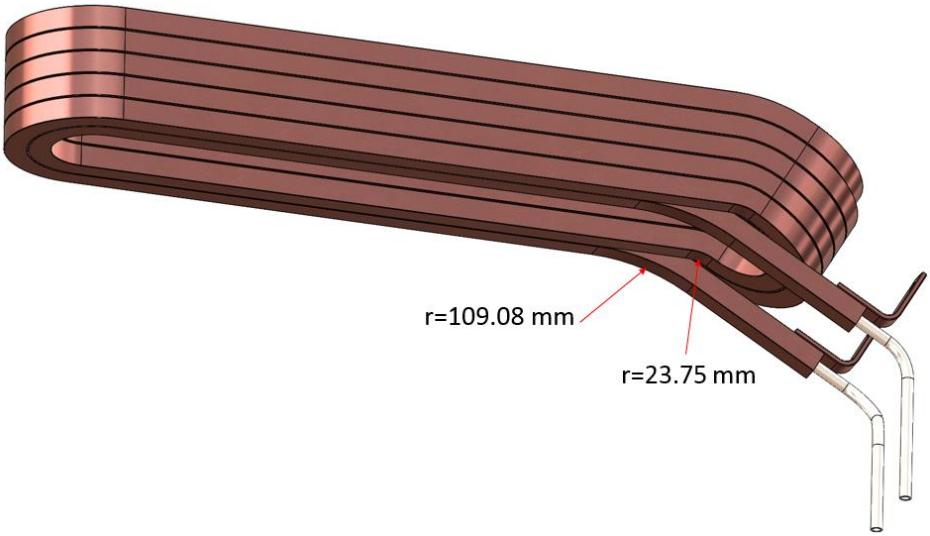

Figure 31. Different bend radiuses at the bottom of the coil.

In Table 12, the hydraulic system was chosen for the best power source. To minimize the costs, the bender can use a standard hydraulic shop press as a power source. The press can be used in other tasks as well if the bender is easily and quickly removable from the press.

Appendix IX displays few different ways to make the bend. Number 1 is the most complicated because it requires supports on top of the coil and also below it. Numbers 2 and 3 share the same idea but number 2 requires force in two spots, so number 3 is the simplest way. To protect the insulation of the cable, the force should be applied to a large area instead of a small spot.

The designed bender consist of two parts: the upper tool and frame. The upper tool will be attached to the hydraulic shop press and it includes two types of bender dies with different bending radiuses. The frame supports the coil during the bending process. The designed upper tool and frame can be seen in Figure 32.

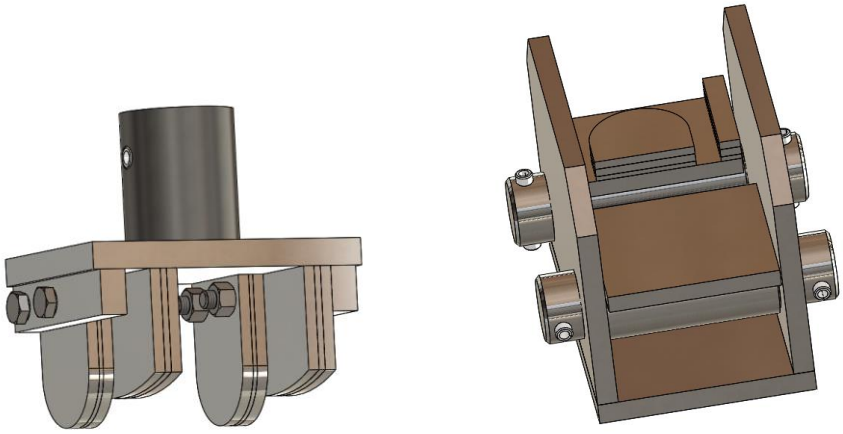

Figure 32. Upper tool and frame.

All sheet metal parts in the upper tool are laser cut, 8 mm structural steel S355. The hydraulic press will be attached in the middle of the tube. The pin holds the upper tool from falling but all of the force of the hydraulic press is applied to the 8 mm plate. The bender dies are bolted, making them easily replaceable if different bending radiuses are needed in the future. The durability of the upper tool is checked using SolidWorks Simulation. In the simulation, the curved surfaces of the bender dies are fixed and the force is applied in the middle of the plate. The force applied is 60000 N. Appendix X shows the mesh and results of the simulation. The largest displacement is 0.056 mm and peak stress is 352 MPa. However, the peak stress is very local, and in general, the stresses are tolerable – below 200 MPa.

Figure 33 shows an exploded view of the bender. All of the sheet metal parts are laser cut 12 mm structural steel S355. The diameter of the shafts is 40 mm and they are locked in place using pins. Figure 30 demonstrates that the plates supporting the coil can rotate on the shaft. Because of this, the coil is always supported on a larger area and damages in the cable can be avoided. As can be seen, the transition requires special spacers under the coil end. The durability of the frame is checked using SolidWorks Simulation. In the simulation, the frame plate is fixed. SolidWorks cannot apply a force on the cylindrical face, and consequently, thin flat surfaces had to be made for the simulation. The used force was 60 kN per each shaft. Appendix XI shows the used mesh and the results. As can be seen, the highest stresses were 226 MPa and largest displacements were 0.049 mm.

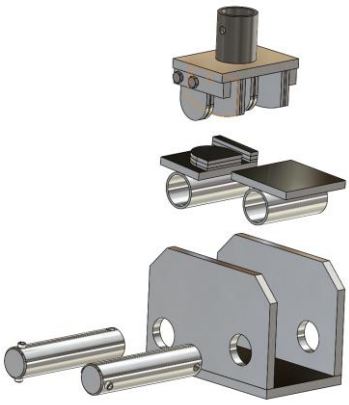

Figure 33. Exploded view of the bender

The bending process and behavior of the supports is demonstrated in Figure 34. As can be seen, both supports rotate during the bending. Figure 35 illustrates the bending operation using a hydraulic press.

Figure 34. A section view of the bender before and during bending.

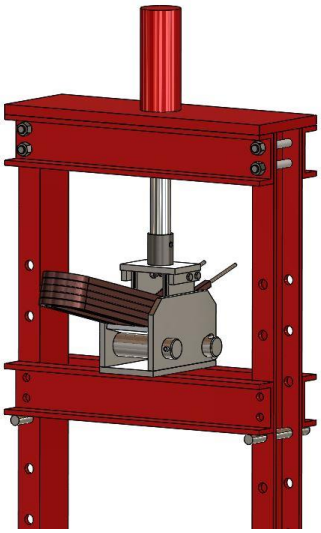

Figure 35. Bender attached to the hydraulic press.

During the bending process, the steel parts will inevitably slide a bit on the surface of the coil. To protect the insulation, it may be necessary to put, for example, thin layers of plastic or leather between the insulation and bender.

3.2.2 Jig

To keep every coil identical, it is necessary to have a jig. The same jig can be used to make the offset bend and also the down bend in the coolant conduits. Therefore, both bending tools should be quickly and easily attachable to the jig. Figure 36 depicts the designed jig with a coil. A tube in the back and side walls keeps the coil in the right place, and all bends will be in identical places. The jig also includes mounting points for bending tools. The jig can be kept steady by attaching it to the table with two M10 screws.

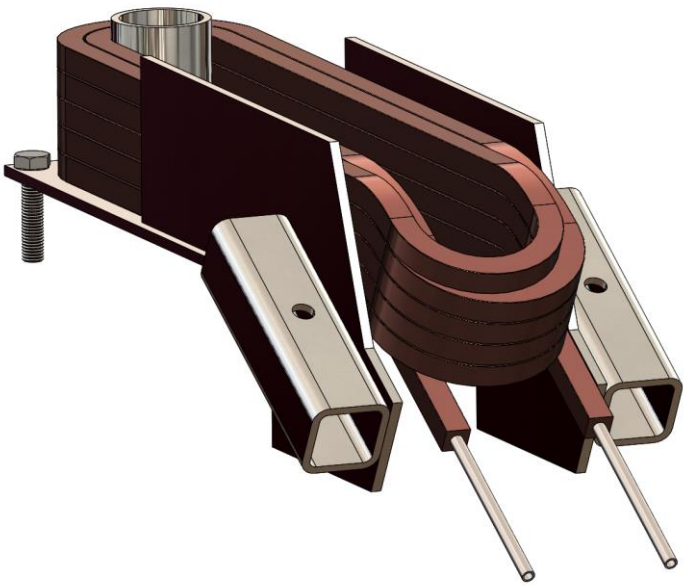

Figure 36. Designed jig with a coil.

3.2.3 Offset tool

As mentioned previously, the coolant tube must have an offset bend to create enough space for compression fittings. Figure 37 demonstrates that the offset bend of the coolant conduit consists of two 45° bends in opposite directions.

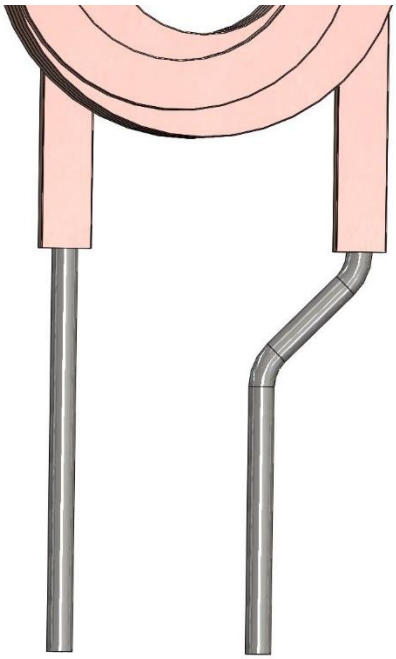

Figure 37. Close-up of the offset bend.

Both bends could be done simultaneously, but it is simpler to make them one by one using the same tool at different mounting points. Figure 38 depicts the designed tool assembled to the jig.

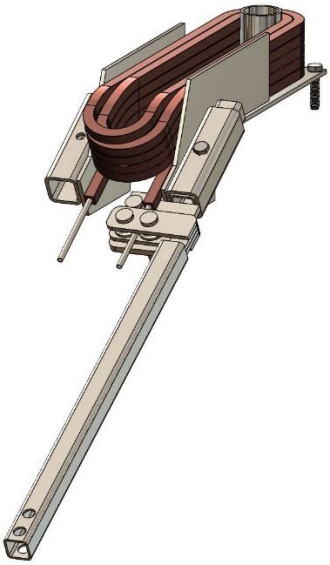

Figure 38. The designed offset tool.

The designed offset tool can be attached to the jig by just one bolt. The offset tool is made of laser cut 5 mm sheet metal parts, pins and 30x30 mm RHS tubes. The same handlebar is used later to make down bends of the coolant conduit. Figure 39 shows an exploded view of

the offset tool. The coolant conduit goes between the roller dies, and bending movement is accomplished using a handlebar. The wall is holding the conduit in the right place while bending. Figure 40 displays the bending process of the first 45° degree bend outwards.

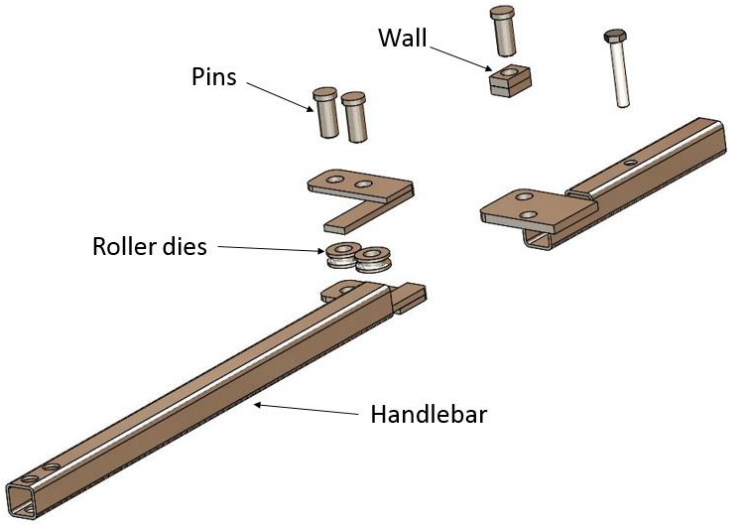

Figure 39. Exploded view of the offset tool.

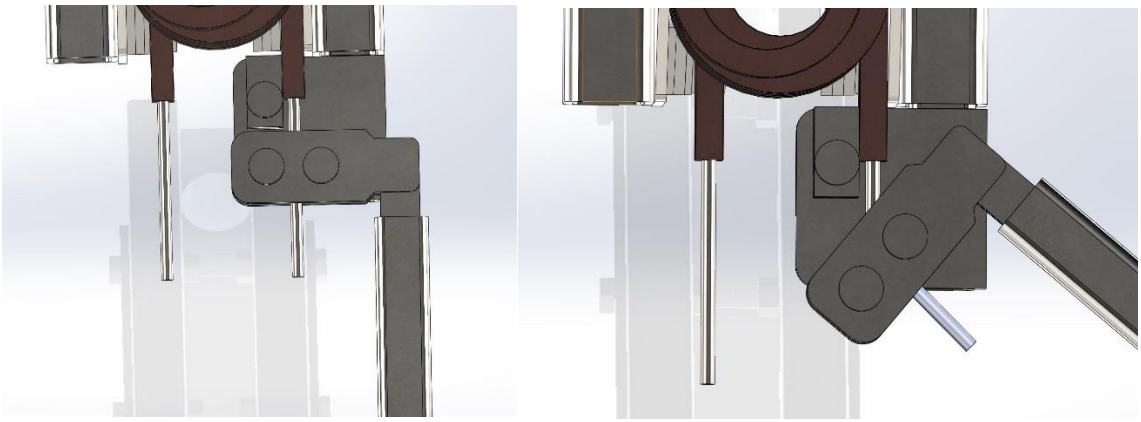

Figure 40. Bending process of the first part of the offset bend.

The next step is to make a 45° degree bend inward. This is accomplished by using the same tool. The wall part must be removed by simply lifting the pin. Then, the handlebar with rollers is placed where the wall used to be. In this case, the outer wall of the jig holds the cable in the right place while bending. Figure 41 illustrates the bending process and the finished offset bend.

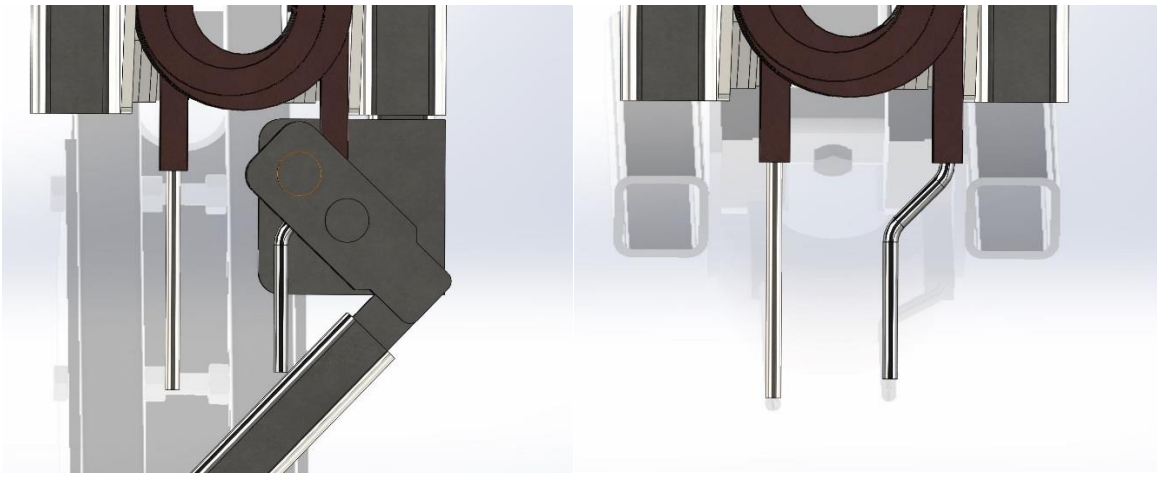

Figure 41. Bending process of the second part of the offset bend and the finished offset bend.

In Figure 41, the length of both tubes was equal before the offset bend. As can be seen, the coolant exit tube must be longer than the coolant before making the offset bend, or the tubes can be cut to same length after the offset bend is done. The right bending angle depends on the springback effect and it can be determined when the prototype is tested. It is recommendable to make a limiter for the bending angle to make sure every coil is identical.

3.2.4 Down bend of coolant conduits

To keep every coil identical, it is recommendable to make the tube down bend while the coil is still on the jig. Therefore, also this tool should be quickly and easily attachable to the bender. The designed tool uses the same mounting point as the offset tool. It also has an identical mounting point on the other side of the jig. Figure 42 shows the tool designed for down bends.

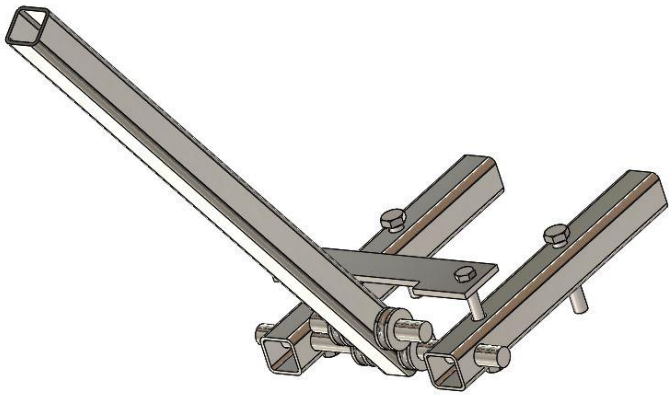

Figure 42. Tube down bender.

The designed tool is very simple and easy to manufacture. It consists of a 30x30 mm RHS square tube, 15 mm shafts and rollers that are the same as in the offset tool. The 5 mm plate is used to hold the cable in the right place while bending. Figure 43 shows the bending process. The right bend angle depends again on the springback effect and it can be determined when the prototype is tested. To make every coil identical, it is recommendable to make a limiter for the bending angle after the right angle is found.

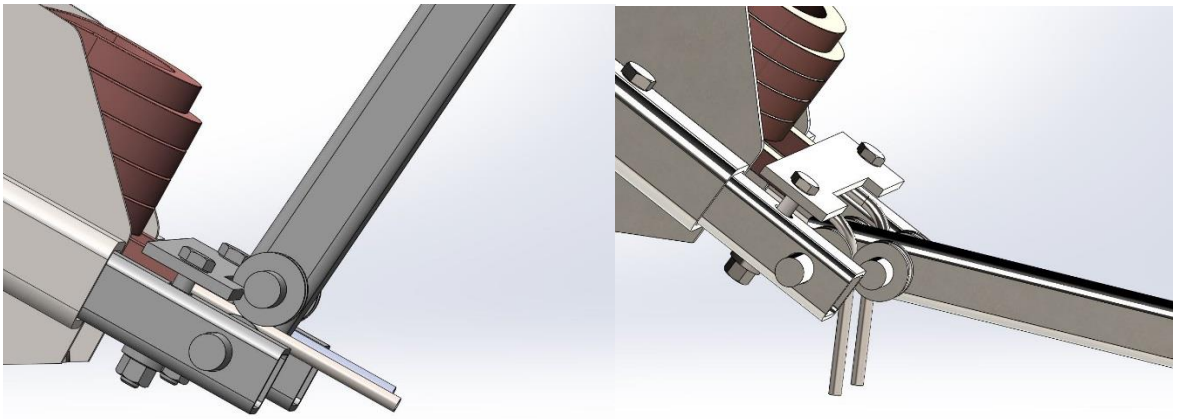

Figure 43. Tube down bend before bending and when the 60° bend is done.

4 DISCUSSION

In the following sections, both machines are analyzed separately. The analysis of the results includes a discussion of functionality, performance, possible problems and manufacturability. Based on these observations, a set improvements are proposed.

4.1 Coiler

The 3D model of the coiler looks feasible, but there are many unknown aspects that will be found out only when the prototype is built and tested. One of the greatest uncertainties is the durability of the insulation on the cable. The insulation can be damaged already in the straightener despite of the nylon walls. During the coiling process, the greatest forces are imposed on the insulation in the bends. Small damages to insulation in the bends are not as serious as damages in the active length area because they can be fixed after the coiling process using for example insulation tape. The endings are outside of the stator laminations, which is why small repairs with tape do not affect the machine's performance.

The amount of overbending is unknown until the cable is tested. For the inner column, even a large amount of over bending is not a problem, but for the outer column, large angles might be problematic since the columns cross in the middle. The bending process might also cause the coolant conduit to change its shape, and thus, its cross-section will not be round but oval. Small deformation will inevitably occur, but it is tolerable if does not affect the coolant flow significantly. The deformation of the coolant conduit also forces copper strands to form, which is tolerable if the strands do not break.

If the straightener works as expected, the next step will be automatizing it using the real time measuring monitor straightness of the cable and servo motor to adjust the straightener. The Arduino microcontroller used in the coiler can also be used to control the straightener.

In the coiler, the clearances in the chain transmissions might cause some problems with accuracy. Even though the bending angles and the limits of the horizontal movement are measured by magnetic sensors, there is a possibility that some horizontal movement will take place in the linear guide during the bending because of the clearances in the chains.

The current coiler requires user to do three things: use the switch, guide the cable to the right groove in the bender dies between the bends, and move the roller die axially. To reduce the workload of the user, it would be possible to use automation to move the cable and the roller die. They both move at the same time and the same amount, indicating that a simple linear motor could handle them both. After that, the user would only need to use the switch and change the roller die between the inner and outer columns.

4.2 Bender

Bending down all of the layers at the end is a very simple process and so are the designed equipment. The necessary bend angle is only 30°, and thus, the coolant conduit and the copper strands should not face any problems. The greatest uncertainty involves protecting the insulation from tearing. As mentioned previously, some soft material will likely be needed between the coil insulation and steel parts of the bender. Thin plastic stripes or leather might be good options. During the bending, it might also be necessary to have some protection between the coil layers.

Again, when making the end bends, it is necessary to bend them over 30° because of the springback effect. After the right amount of over-bending is found in the tests, it would be useful to set a limiter between the tools to ease the users' work and make sure that every coil is identical.

The time required for making one end bend depends on how much time is needed to protect the insulation and the time required for using the hydraulic press. In mass production, a manual press would be too slow. Finalizing the coolant conduits should not cause any problems. The designed jig and tube benders are very simple and robust.

5 CONCLUSIONS

This master's thesis introduces a design for manufacturing equipment for a direct liquid cooled tooth-coil winding. The topic was provided by Lappeenranta University of Technology. Direct liquid cooling can improve the performance of an electrical machine significantly since larger linear current densities can be achieved. Especially applications that require high torque at low speeds can benefit from direct liquid cooling. However, manufacturing direct liquid cooled windings is much more complicated than manufacturing traditional windings because of the internal stainless steel coolant conduit, and earlier, there has not been machinery for the manufacturing process.

The manufacturing equipment was designed to produce multilayer duplex-helical tooth-coil windings developed at Lappeenranta University of Technology, and later this year, they will be used to build a 500 kW proof-of-concept prototype motor.

The manufacturing process of the coil was divided in several steps that all have their own machine. The first step is to straighten the cable as it comes out of the spool, the second step is to produce the duplex-helical multilayer form, the third step is to press down the end of the coil, and the fourth step is to bend the coolant conduits into the right direction for proof-of-concept assembly. Based on the 3D models, the designed machines look feasible, but a number of uncertainties might cause problems in real life. Especially the durability of the cable insulation might require further examination.

The next step is to build the prototypes of the designed machines and start testing them with a real cable to see if they work as expected and to find the right settings for the required amount of overbending. If everything works as expected, more automation could be added to cable straightening and coiling processes to reduce the amount of manual labor and speed up the manufacturing process.

LIST OF REFERENCES

Airila, M., Ekman, K., Hautala, P., Kivioja, S., Kleimola, M., Martikka, H., Miettinen, J., Niemi, E., Ranta, A., Rinkinen, J., Salonen, P., Verho, A., Vilenius, M., Välimaa, V. 2003. Koneenosien suunnittelu. 4th edition. Porvoo: WS Bookwell Oy. 796 p.

Alexandrova, Y., Semken, R. S. & Pyrhönen, J. 2013. Permanent Magnet Synchronous Generator Design Solution for Large Direct-Drive Wind Turbines. International Review of Electrical Engineering, 8: 6. pp. 1728-1737.

Boothroyd, G., Dewhurst, P. & Knight, W. 2002. Product Design for Manufacture and Assembly. 2nd edition. Boca Raton: CRC Press. 698 p.

Chapman, S. J. 2005. Electric Machinery Fundamentals. 4th edition. New York: McGraw-Hill. 746 p.

Eskelinen, H. 2012. Advanced approaches to analytical and systematic DFMA analysis. Acta Universitatis Lappeenrantaensis 509. 141 p.

Eskelinen, H. & Karsikas, S. 2013. DFMA-OPAS – Valmistus- ja kokoonpanoystävällisen tuotteen suunnittelu. 115 p.

Hanselman, D. 2006, Brushless Permanent Magnet Motor Design. 2nd edition. Lebanon, Ohio: Magna Physics Publishing. 392 p.

IS IEC 60034-1. 2004. Rotating electrical machines- Part 1: Rating and Performance. 11th edition.

Pahl, G. & Beitz, W. 1990. Koneensuunnitteluoppi. 2nd edition. Porvoo: WSOY:n graafiset laitokset. 608 p.

Pahl, G., Beitz, W., Feldhusen, J. & Grote, K. H. 2007. Engineering design: A systematic Approach. Translated from German and edited by Ken Wallace & Luciënne Blessing. 3rd edition. London: Springer-Verlag. 617 p.

Polikarpova, M., Ponomarev, P., Röyttä, P., Semken, R. S., Alexandrova, Y. & Pyrhönen, J. 2015. Direct liquid cooling for an outer-rotor direct-drive permanent-magnet synchronous generator for wind farm applications. IET Electric Power Applications, 9:8. pp. 523-532.

Pyrhönen, J., Jokinen, T. & Hrabovcova, V. 2008. Design of Rotating Electrical Machines. Chichester: John Wiley & Sons, Ltd. 512 p.

SFS-EN 349 + A1. 2008. Koneturvallisuus. Vähimmäisetäisyydet kehonosien puristumisvaaran välttämiseksi. 2. painos. Suomen standardisoimisliitto SFS. 18 s.

Semken, R.S., Polikarpova, M., Röyttä, P., Alexandrova, J., Pyrhönen, J., Nerg, J., Mikkola, A. & Backman, J. 2012. Direct-drive permanent magnet generators for high-power wind turbines: benefits and limiting factors. IET Renewable Power Generation, 6:1. pp. 1-8.

Valtanen, E. 2012. Tekniikan taulukkokirja. Mikkeli: Genesis-Kirjat Oy. 1200 p.

Vukosavic, S. N. 2013. Electrical Machines. London: Springer. 649 p.

Worden, J. A. & Mundulas, J. M., 2001. Understanding, Diagnosing, and Repairing Leaks in Water-Cooled Generator Stator Windings. GE Power Systems. New York, Schenectady. 649 p.

Alternatives for the spool stand:

Alternative 1: Spool in horizontal position on the table with wheels. Pros: - Cons: Lifting a very large spool on the table might be problematic. Needs a lot of floor space.	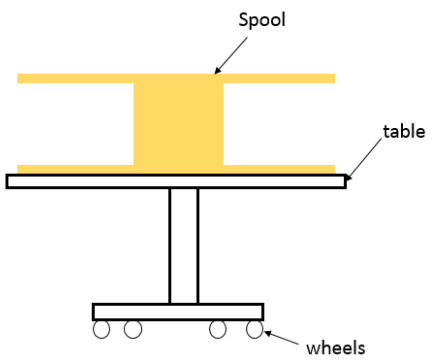
Alternative 2: Spool in vertical position on two rollers. Pros: Simple, compact structure. Cons: Height might be an issue when using very small spools (the height of the cable straightener is constant)	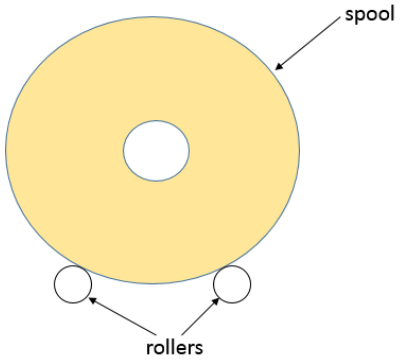
Alternative 3: Spool in vertical position on a two-legged stand. Pros: Simple structure. The height of the spool can be adjusted using telescopic legs. Cons: Requires a spool with a center hole. Needs more space than alternative 2. Replacing the spool requires cutting the structure.	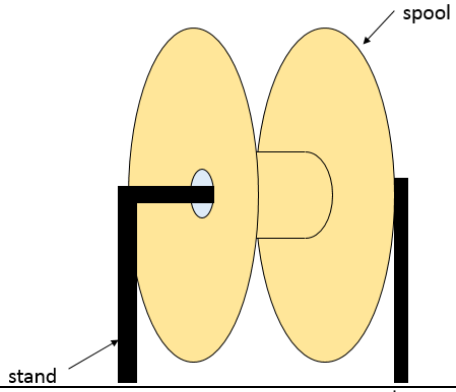
Alternative 4: Spool in vertical position on a one-legged stand. Pros: Very simple structure. The height of the spool can be adjusted using telescopic legs as in alternative 3. Replacing the spool is very easy. Cons: Not as stable as alternatives 2 or 3. For very heavy spools, the structure needs to be carefully designed.	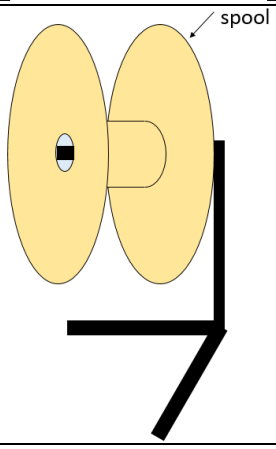

APPENDIX II

Alternative working principles for coiler

Alternative 1: Fixed pivot point for bender frame and geared roller die. Pros: Easy bending movement because of a stationary pivot point. Cons: Very complicated gearing for roller die.	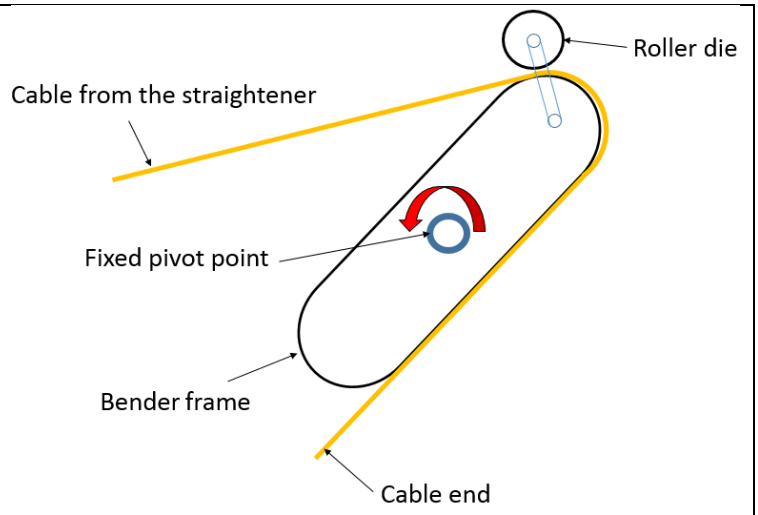
Alternative 2: Bender frame with two pivot points. The pivot point is changed between each bending movement. Pros: The roller die can be stationary Cons: The pivot point may change places	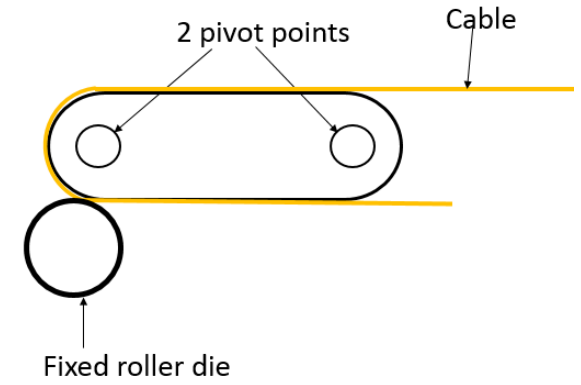

Inner shaft calculations

Chain forces:

Power: $P_1 := 348.717W$

Speed of the chain: $v_{chain} := 0.066 \frac{m}{s}$

Mass of the chain: $q := 2.8 \frac{kg}{m}$

Load factor: $k_k := 1.5$

Chain force: $N_1 := \frac{(P_1 \cdot k_k)}{v_{chain}} + q \cdot v_{chain}^2 = 7.925 \times 10^3 N$

Shaft dimensions:

Material S355:

Tensile strength: $R_e := 380$

Dynamic flexural strenght: $\sigma_{tw} := 260$

Torque: $M_v := 1000 \cdot 10^3$

Bending moment from the chain: $M_t := N_1 \cdot 102 \cdot \frac{1}{N} = 8.084 \times 10^5$

Safety factor: $n := 1.5$

Stress concentration factor for torque: $K_{fv} := 1.6$

Stress concentration factor for bending: $K_{ft} := 2.4$

$$D := \sqrt[3]{\frac{(32.n)}{\pi} \sqrt{\left[\frac{(K_{ft} \cdot M_t)}{\sigma_{tw}}\right]^2 + \frac{(M_v^2)}{R_e^2}}} = 49.446 \quad mm$$

The dimensions of the key on the inner shaft:

According to the standard SFS-2636 the width of the key is 16 mm and height 10 mm, when the shaft diameter is 30-38 mm. Let's solve the length of the key:

Width of the key: $b := 16mm$

Shaft diameter: $d := 50mm$

Torque: $T_1 := 1000000N \cdot mm$

Minimum key length in case of shearing of the key:

$\tau_{key} := 30MPa$

$$l_{shear} := \frac{(2 \cdot T_1 \cdot n)}{\tau_{key} \cdot b \cdot d} = 0.125\,m$$

Minimum key length in case of maximum surface pressure of the shaft:

Allowable surface pressure on the shaft: $p_{shaft} := 0.6 \cdot 150MPa = 90 \cdot MPa$

Height of the keyway in the shaft: $t_1 := 6mm$

Minimum key length:

$$l_{shaft} := \frac{T_1}{p_{shaft} \cdot t_1 \cdot \left[\frac{(d - t_1)}{2}\right]} = 0.084\,m$$

Minimum key length in case of maximum surface pressure of the hub:

Allowable surface pressure on the hub: $p_{hub} := 0.6 \cdot 150MPa = 90 \cdot MPa$

Height of the keyway in the hub: $t_2 := 4.3mm$

Minimum key length:

$$l_{hub} := \frac{T_1}{p_{hub} \cdot t_2 \cdot \left[\frac{(d + t_2)}{2}\right]} = 0.095\,m$$

CONCLUSIONS: 2 KEYS NEEDED

APPENDIX V

Torque-frequency curve of the Nema 51 stepper motor

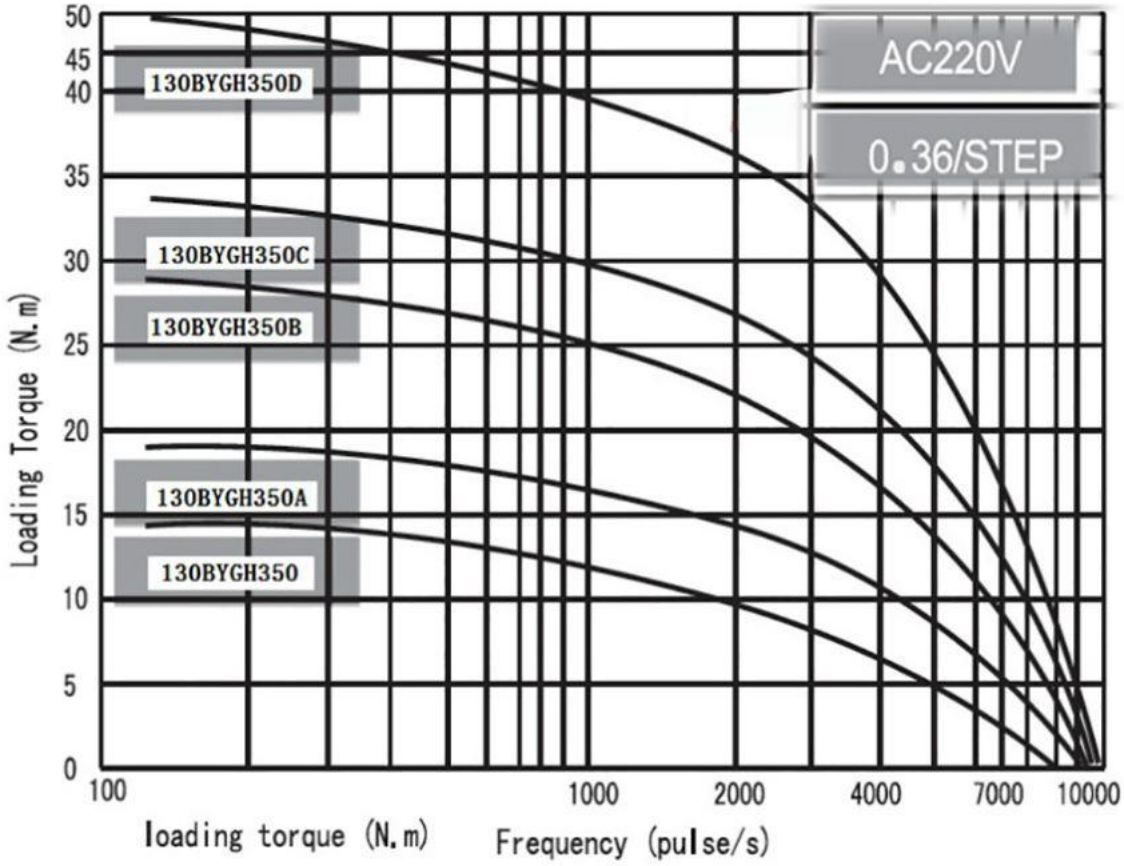

Chain and sprocket calculation for bending movement:

Motor:

Rotating speed of the motor shaft (RPM): $n_{motor\_rpm1} := 90 \quad rpm$

for calculation: $n_{motor} := \frac{n_{motor\_rpm1}}{60s} = 1.5 \frac{1}{s}$

$\omega_{motor} := 2 \cdot \pi \cdot n_{motor} = 9.425 \frac{1}{s}$

Torque on the motor shaft from diagram: $T_{motor} := 37N \cdot m$

Nominal output power: $P_{motor} := T_{motor} \cdot \omega_{motor} = 348.717\,W$

Number of teeth of the motor shaft sprocket: $Z_{1\_motor} := 11$

Pitch of the sprocket $p_1 := 15.875mm$

Number of teeth on the layshaft sprocket 1: $Z_{2\_lay1} := 70$

Chain 1 selection:

Load factor: $k_{k1} := 1.5$

Number of teeth factor: $k_{z1} := \left(\frac{19}{Z_{1\_motor}}\right)^{1.085} = 1.809$

Effective power for calculations: $P_{1eff0} := P_{motor} \cdot k_{k1} \cdot k_{z1} = 946.457\,W$

Speed of the chain: $v_{chain1} := n_{motor} \cdot Z_{1\_motor} \cdot p_1 = 0.262 \frac{m}{s}$

Chain link factor: $k_{x1} := \left[\frac{(Z_{2\_lay1} - Z_{1\_motor})}{2 \cdot \pi}\right]^2 = 88.175$

Preliminary distance between the shafts: $a_{1d0} := 40 \cdot p_1 = 0.635\,m$

Number of the links:

$$X_0 := 2\cdot\frac{a_{1d0}}{p_1} + \frac{(Z_{1\_motor} + Z_{2\_lay1})}{2} + \frac{(k_{x1}\cdot p_1)}{a_{1d0}} = 122.704$$

Selected number of the links: $X := 122$

Distance factor: $k_{11} := X - \frac{(Z_{1\_motor} + Z_{2\_lay1})}{2} = 81.5$

Exact distance between the shafts: $a_{d1} := \frac{p_1}{4}\cdot\left[k_{11} + \sqrt{\left(k_{11}^2 - 8\cdot k_{x1}\right)}\right] = 0.629\,m$

Shaft distance factor: $k_{a1} := 1$ Shaft distance about 40*p1

Chain configuration factor: $k_{m1} := 1$ For normal links km=1

Chain type factor: $k_{t1} := 1$ For roller chains kt=1

Shaft factor: $k_{p1} := 1$ For two sprockets kp=1

Life time factor:

Standard lifetime $L_{01} := 15000$

Required lifetime $L_{v1} := 6000$

$$k_{e1} := \sqrt[3]{\left(\frac{L_{01}}{L_{v1}}\right)} = 1.357$$

Confirm the effective power: $P_{1eff} := \frac{P_{1eff0}}{k_{a1}\cdot k_{m1}\cdot k_{t1}\cdot k_{p1}\cdot k_{e1}} = 697.355\,W$

According to DIN 8187 the suitable chain size is 501 (10 B). Pitch: 15.875 mm

Layshaft:

Torque on the layshaft: $T_{lay} := T_{motor}\cdot\frac{Z_{2\_lay1}}{Z_{1\_motor}} = 235.455\cdot N\cdot m$

Rotating speed of the layshaft: $n_{lay} := n_{motor}\cdot\frac{Z_{1\_motor}}{Z_{2\_lay1}} = 0.236\,\frac{1}{s}$

in rpm: $n_{lay\_rpm} := n_{lay}\cdot 60\,\frac{s}{1} = 14.14\,rpm$

$\omega_{lay} := 2\cdot\pi\cdot n_{lay} = 1.481\,\frac{1}{s}$

Number of teeth on the layshaft sprocket 2: $Z_{1\_lay2} := 11$

Chain 2 selection:

Pitch of the sprockets: $p_2 := 25.4mm$

Speed of the chain: $v_{chain2} := n_{lay} \cdot Z_{1\_lay2} \cdot p_2 = 0.066 \frac{m}{s}$

Load factor: $k_{k2} := 1.5$

Number of teeth factor: $k_{z2} := \left(\frac{19}{Z_{1\_motor}}\right)^{1.085} = 1.809$

Effective power for calculations: $P_{2eff0} := P_{motor} \cdot k_{k2} \cdot k_{z2} = 946.457\,W$

Chain link factor: $k_{x2} := \left[\frac{(Z_{2\_lay1} - Z_{1\_motor})}{2 \cdot \pi}\right]^2 = 88.175$

Preliminary distance between the shafts: $a_{2d0} := 40 \cdot p_1 = 0.635\,m$

Number of the links:

$$X_{02} := 2 \cdot \frac{a_{2d0}}{p_1} + \frac{(Z_{1\_motor} + Z_{2\_lay1})}{2} + \frac{(k_{x2} \cdot p_1)}{a_{2d0}} = 122.704$$

Selected number of the links: $X_2 := 128$

Distance factor: $k_{12} := X_2 - \frac{(Z_{1\_motor} + Z_{2\_lay1})}{2} = 87.5$

Exact distance between the shafts: $a_{d2} := \frac{p_1}{4} \cdot \left[k_{12} + \sqrt{\left(k_{12}^2 - 8 \cdot k_{x2}\right)}\right] = 0.678\,m$

Shaft distance factor: $k_{a2} := 1$ Shaft distance around 40*p1

Chain configuration factor: $k_{m2} := 1$ For normal links km=1

Chain type factor: $k_{t2} := 1$ For roller chains kt=1

Shaft factor: $k_{p2} := 1$ For two sprockets kp=1

Life time factor:

Standard lifetime $L_{02} := 15000$

Required lifetime $L_{v2} := 6000$

$$k_{e2} := \sqrt[3]{\left(\frac{L_{02}}{L_{v2}}\right)} = 1.357$$

Confirm the effective power: $P_{eff} := \frac{P_{2eff0}}{k_{a2} \cdot k_{m2} \cdot k_{t2} \cdot k_{p2} \cdot k_{e2}} = 697.355\,W$

According to DIN 8187 the suitable chain size is 548 (16 B). Pitch: 25.40 mm

Main shaft:

Number of teeth on the main shaft sprocket: $Z_{s\_main} := 45$

Torque of the main shaft: $T_{main} := T_{lay} \cdot \frac{Z_{s\_main}}{Z_{1\_lay2}} = 963.223 \cdot N \cdot m$

Rotating speed of the main shaft: $n_{main} := n_{lay} \cdot \frac{Z_{1\_lay2}}{Z_{s\_main}} = 0.058 \frac{1}{s}$

in rpm: $n_{main\_rpm} := n_{main} \cdot 60s = 3.457$ rpm

Chain and sprocket selection for horizontal movement.

Motor:

Rotating speed of the motor shaft (RPM): $n_{motor\_rpm1} := 60 \quad rpm$

for calculation: $n_{motor} := \frac{n_{motor\_rpm1}}{60s} = 1\frac{1}{s}$

$\omega_{motor} := 2 \cdot \pi \cdot n_{motor} = 6.283\frac{1}{s}$

Torque on the motor shaft from diagram: $T_{motor} := 50N \cdot m$

Number of teeth of the motor shaft sprocket: $Z_{1\_motor} := 11$

Number of teeth on the hollow shaft: $Z_2 := 57$

Nominal output power: $P_{motor} := T_{motor} \cdot \omega_{motor} = 314.159\,W$

Pitch of the sprocket $p_1 := 15.875mm$

Chain 1 selection:

Load factor: $k_k := 1.5$

Number of teeth factor: $k_z := \left(\frac{19}{Z_{1\_motor}}\right)^{1.085} = 1.809$

Effective power for calculations: $P_{eff0} := P_{motor} \cdot k_k \cdot k_z = 852.664\,W$

Speed of the chain: $v_{chain1} := n_{motor} \cdot Z_{1\_motor} \cdot p_1 = 0.175\frac{m}{s}$

Chain link factor: $k_{x1} := \left[\frac{(Z_2 - Z_{1\_motor})}{2 \cdot \pi}\right]^2 = 53.599$

Preliminary distance between the shafts: $a_{1d0} := 40 \cdot p_1 = 0.635\,m$

Number of the links:

$$X_0 := 2 \cdot \frac{a_{1d0}}{p_1} + \frac{(Z_{1\_motor} + Z_2)}{2} + \frac{(k_{x1} \cdot p_1)}{a_{1d0}} = 115.34$$

Selected number of the links: $X := 116$

Distance factor: $k_{11} := X - \frac{(Z_{1\_motor} + Z_2)}{2} = 82$

Exact distance between the shafts: $a_{d1} := \frac{p_1}{4} \cdot \left[k_{11} + \sqrt{\left(k_{11}^2 - 8 \cdot k_{x1}\right)}\right] = 0.64\,m$

Shaft distance factor: $k_{a1} := 1$ Shaft distance about 40*p1

Chain configuration factor: $k_{m1} := 1$ For normal links km=1

Chain type factor: $k_{t1} := 1$ For roller chains kt=1

Shaft factor: $k_{p1} := 1$ For two sprockets kp=1

Life time factor:

Standard lifetime $L_{01} := 15000$

Required lifetime $L_{v1} := 6000$

$$k_{e1} := \sqrt[3]{\left(\frac{L_{01}}{L_{v1}}\right)} = 1.357$$

Confirm the effective power: $P_{1eff} := \frac{P_{eff0}}{k_{a1} \cdot k_{m1} \cdot k_{t1} \cdot k_{p1} \cdot k_{e1}} = 628.248\,W$

According to DIN 8187 the suitable chain size is 501 (10 B). Pitch: 15.875 mm

Torque of the hollow shaft: $T_{main} := T_{motor} \cdot \frac{Z_2}{Z_{1\_motor}} = 259.091 \cdot N \cdot m$

Rotating speed of the hollow shaft: $n_{hollow} := n_{motor} \cdot \frac{Z_{1\_motor}}{Z_2} = 0.193 \frac{1}{s}$

in rpm: $n_{hollow\_rpm} := n_{hollow} \cdot 60s = 11.57\ rpm$

Pinion and rack

Pitch circle of the pinion: $d_{pinion} := 100mm$

Pulling force of the rack: $F_{rack} := \frac{T_{main}}{\left(\frac{d_{pinion}}{2}\right)} = 5.182 \cdot kN$

Speed of the rack: $v_{rack} := n_{hollow} \cdot \pi \cdot d_{pinion} = 60.627 \cdot \frac{mm}{s}$

Rotating speed of the motor during the bending movement:

Rotating speed of the bending: $n_{1bend} := 3.457rpm$

Rotating speed of the motor: $n_{speed} := n_{1bend} \cdot \frac{Z_2}{Z_{1\_motor}} = 17.914 \cdot rpm$

Layshaft diameter:

Chain forces:

Power: $P_1 := 348.717W$

Speed of the chain: $v_{chain} := 0.262 \frac{m}{s}$

Mass of the 501 (10B) chain: $q := 1.08 \frac{kg}{m}$

Load factor: $k_k := 1.5$

Dynamic load in the chain: $F_s := \frac{P_1 \cdot k_k}{v_{chain}} = 1.996 \times 10^3 N$

Centrifugal force: $F_d := q \cdot v_{chain}^2 = 0.074 N$

Chain force: $N_1 := F_s + F_d = 1.997 \times 10^3 N$

Safety check:

Breaking load of the 10B roller chain is Fb=22,7 kN.

For static load: $\frac{Fb}{F_s} \geq 7$ $\frac{22700N}{F_s} = 11.37$ OK!

For dynamic load: $\frac{Fb}{N_1} \geq 5$ $\frac{22700N}{N_1} = 11.37$ OK!

Layshaft dimensions:

Material S355:

Tensile strength: $R_e := 380$

Dynamic flexural strength: $\sigma_{tw} := 260$

Torque: $M_v := 350 \cdot 10^3$

Bending moment: $M_t := N_1 \cdot 85 \cdot \frac{1}{N} = 1.697 \times 10^5$

Safety factor: $n := 1.5$

Stress concentration factor for torque: $K_{fv} := 1.6$

Stress concentration factor for bending: $K_{ft} := 2.4$

$$D := \sqrt[3]{\frac{(32 \cdot n)}{\pi} \sqrt{\left[\frac{(K_{ft} \cdot M_t)}{\sigma_{tw}}\right]^2 + \frac{(M_v^{\,2})}{R_e^{\,2}}}} = 30.281 \quad \text{mm}$$

Shaft diameter: min 30mm

The dimensions of the key:

According to the standard SFS-2636 the width of the key is 10mm and height 8 mm, when the shaft diameter is 30-38 mm. Let's solve the length of the key:

Width of the key: $b := 10mm$

Shaft diameter: $d := 35mm$

Torque: $T_1 := 236000N \cdot mm$

Minimum key length in case of shearing of the key:

$\tau_{key} := 30MPa$

$$l_{shear} := \frac{(2 \cdot T_1 \cdot n)}{\tau_{key} \cdot b \cdot d} = 67.429 \cdot mm$$

Minimum key length in case of maximum surface pressure of the shaft:

Allowable surface pressure on the shaft: $p_{shaft} := 0.6 \cdot 150MPa = 90 \cdot MPa$

Height of the keyway in the shaft: $t_1 := 5mm$

Minimum key length:

$$l_{shaft} := \frac{T_1 \cdot n}{p_{shaft} \cdot t_1 \cdot \left[\frac{(d - t_1)}{2}\right]} = 52.444 \cdot mm$$

Minimum key length in case of maximum surface pressure of the hub:

Allowable surface pressure on the hub: $p_{hub} := 0.6 \cdot 150MPa = 90 \cdot MPa$

Height of the keyway in the hub: $t_2 := 3.3mm$

Minimum key length:

$$l_{hub} := \frac{T_1 \cdot n}{p_{hub} \cdot t_2 \cdot \left[\frac{(d + t_2)}{2}\right]} = 62.241 \cdot mm$$

APPENDIX IX

Bending methods.

1) Force applied to the end, bender die below the coil. Rest of the coil supported.	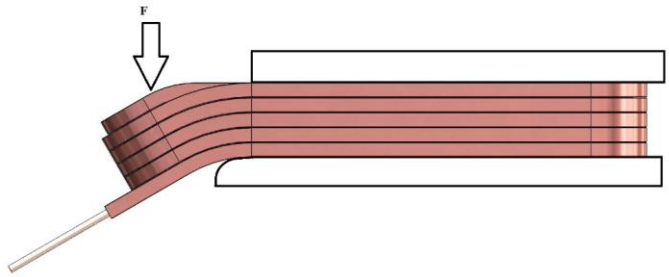
2) Force applied to two points. Bender die below the coil.	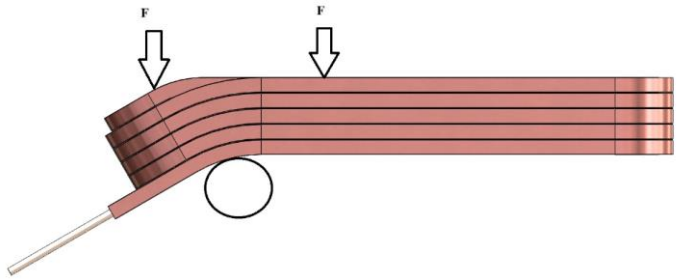
3) Coil upside down. Force applied to the bottom of the coil.	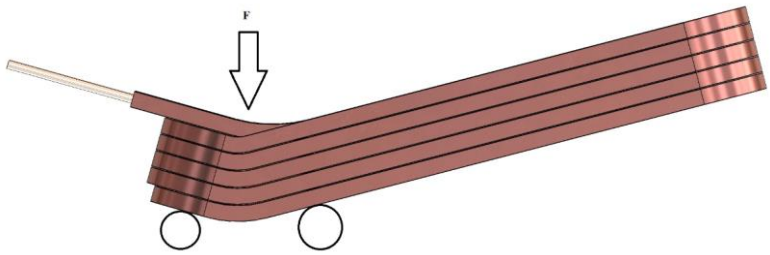

Upper tool FE analysis

Mesh:

Displacements:

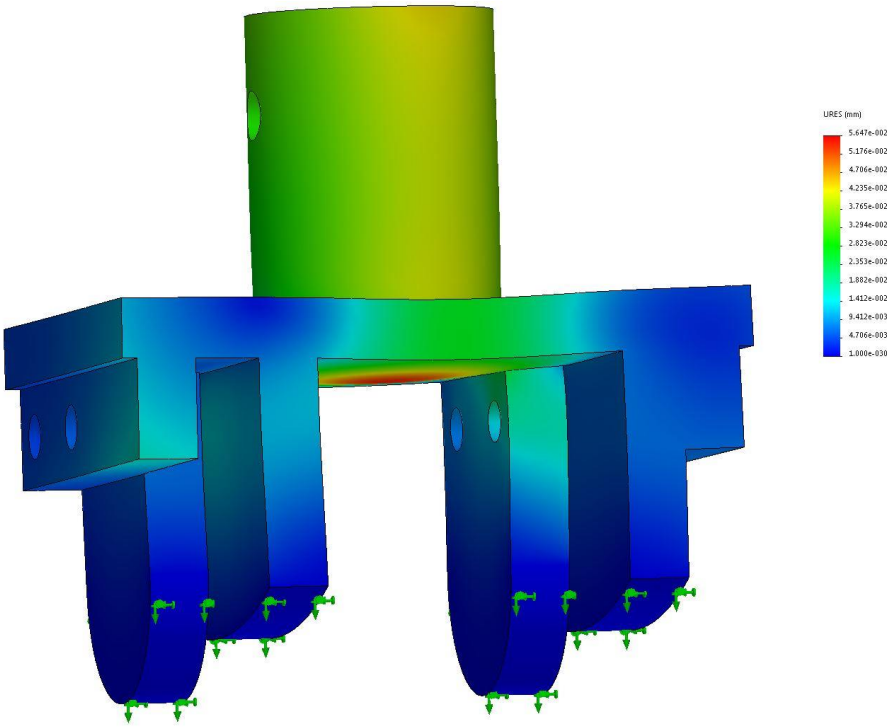

Von Mises stresses:

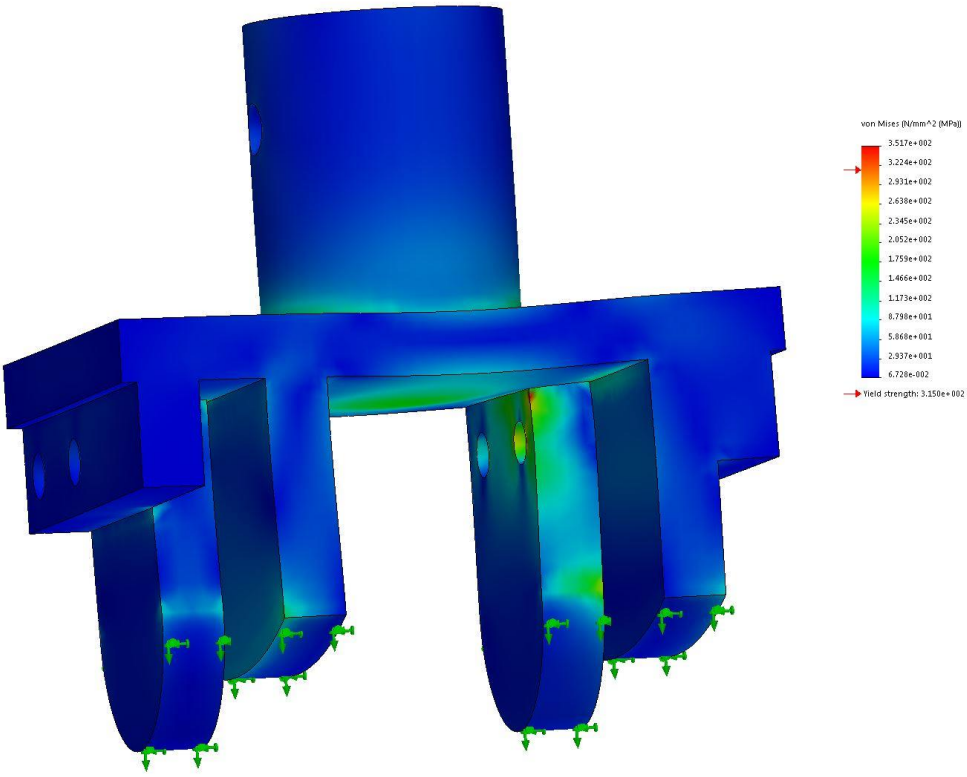

FE analysis of the bender frame:

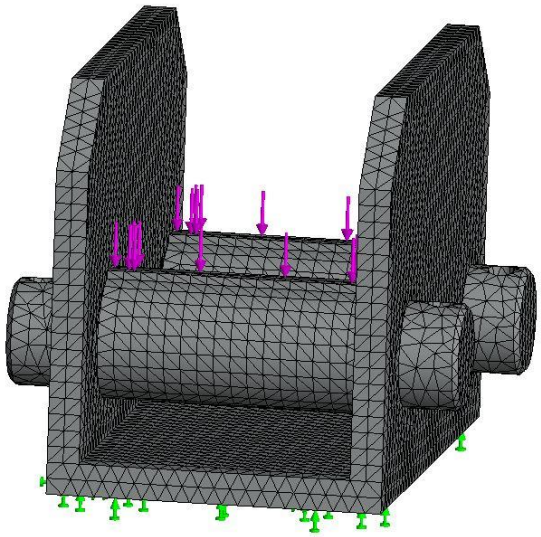

Mesh:

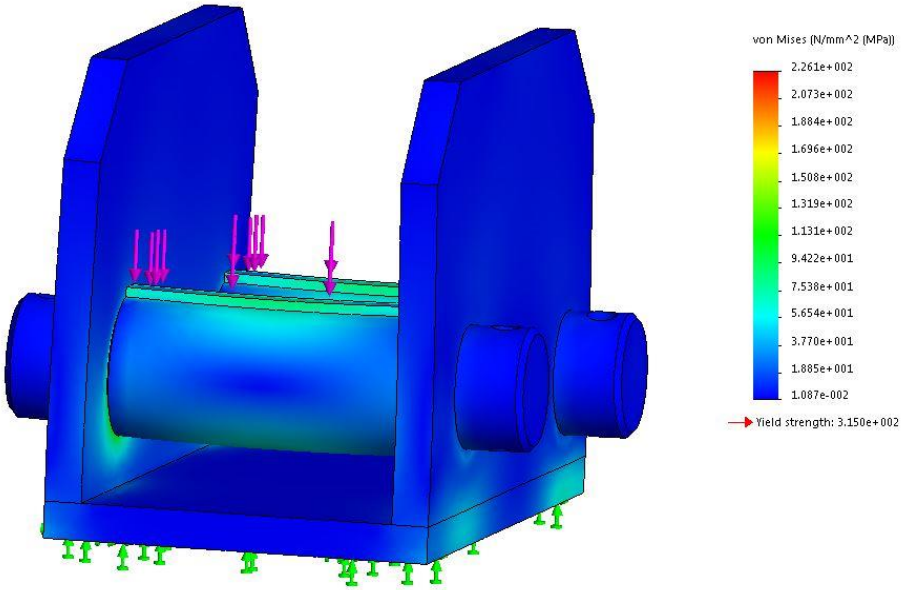

Von Mises stresses

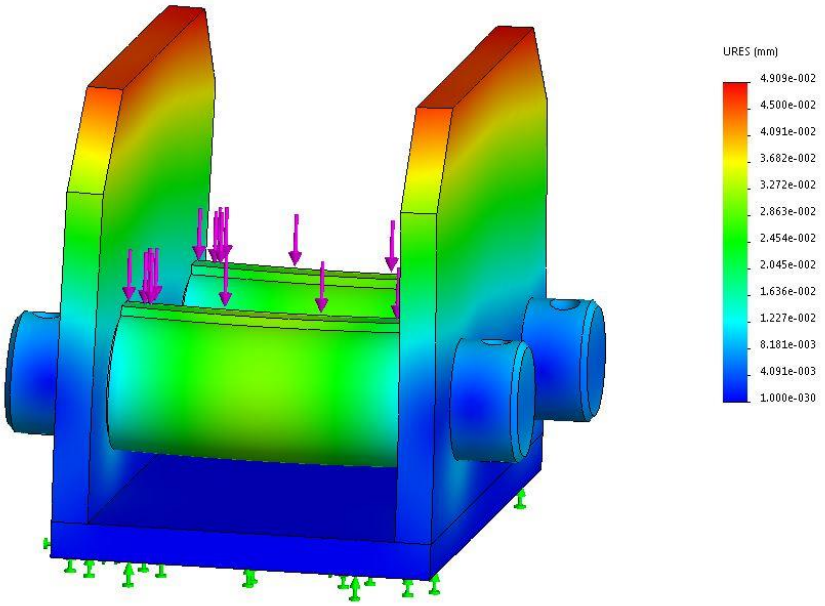

Displacements