LUT UNIVERSITY
LUT School of Energy Systems
LUT Mechanical Engineering

Teemu Hujanen

DEVELOPMENT OF THE DRAW BEAM

Examiners: Prof. D. Sc. (Tech.) Timo Björk
M. Sc. (Tech.) Antti Ahola

ABSTRACT

LUT University
LUT School of Energy Systems
LUT Mechanical Engineering

Teemu Hujanen

Development of the draw beam

Masters's thesis

2019

57 pages, 39 figures, 11 tables, 2 appendixes

Examiner: Prof. D. Sc. (Tech.) Timo Björk
M. Sc. (Tech.) Antti Ahola

Keywords: truck, draw beam, FE-analysis, fatigue, S700

In this thesis, a truck draw beam that passes type-approval tests is being redesigned. The purpose of the work is to get rid of the welds in the current draw beam. The easiest way to do this is to prepare the draw beam by bending. Another objective is to increase the strength of the draw beam so that it can be used with larger trucks.

The work is based on the E-regulation 55, which lays down provisions for the draw beam. Solidworks 3D design software is used in this work as the main CAD program. Abaqus software is applied for finite element method analysis. The fatigue analysis was based on the 4R method and the analytical methods defined by the standards. These also check for the final drawbar durability using residual stresses remaining in the finished beam.

Based on finite element method analysis and calculation, it can be stated that the draw beam can be made by cold forming using S700 steel. This provided a more durable and lighter draw beam compared to the old version. The draw beam should also pass the type-approval tests.

TIIVISTELMÄ

LUT-yliopisto
LUT Energiajärjestelmät
LUT Kone

Teemu Hujanen

Vetopalkin uudelleen suunnittelu

Diplomityö

2019

57 sivua, 39 kuvaa, 11 taulukkoa ja 2 liitettä

Tarkastaja: Professori Timo Björk
DI Antti Ahola

Avainsanat: Kuorma-auto, vetopalkki, FE-analyysi, väsyminen, S700

Tässä diplomityössä uudelleen suunnitellaan kuorma-auton vetopalkki M. Korte Oy:lle, joka läpäisee tyyppihyväksyntä testit. Työn tarkoituksena on päästä nykyisessä vetopalkissa olevista hitsauksista eroon. Tähän helpoin tapa on valmistaa vetopalkki taivuttamalla. Toisena päämääränä on saada vetopalkille lisää kestävyyttä, jotta sitä voidaan käyttää isompi massaisten kuorma-autojen kanssa.

Työn pohjana käytetään E-sääntö 55, jossa annetaan vetopalkille määräyksiä. Työssä käytetään suunnitteluun Solidworks 3D-suunnitteluohjelmistoa. Suunnittelun apuna elementtimenetelmää Abaqus-ohjelmistolla sekä laskentaa. Väsymisanalyysissä käytettiin 4R-menetelmää sekä standardien määrittämiä kaavoja. Näillä myös tarkistettaan lopullisen vetopalkin kestävyys käyttäen hyväksi valmistettuun palkkiin jääneitä jäännösjännityksiä.

Elementtimenetelmäanalyysin sekä laskennan perusteella voidaan todeta, että vetopalkki voidaan valmistaa taivuttamalla käyttäen S700 terästä. Tällöin saatiin kestävämpi sekä kevyempi vetopalkki vanhaan version verrattuna. Vetopalkin pitäisi myös läpäistä tyyppihyväksyntä testit.

ACKNOWLEDGEMENTS

Thanks for M. Korte Oy for thesis topic, to Pertti Aulomaa for guidance from the company and for professor Timo Björk from LUT. And thanks for everyone who is been involved during my university studies.

Teemu Hujanen
Lappeenranta 24.4.2019

TABLE OF CONTENTS

LIST OF SYMBOLS AND ABBREVIATIONS

a_b	Correction factor for load direction
A_s	The tensile stress area of the bolt [mm^2]
a_v	Factor depending on strength class of the bolt
C	Mass that trailers axle(s) forwards to ground [tons]
CET/CEV	Carbon equivalent
D	Theoretical reference value for horizontal forces [kN]
d_0	Diameter of the hole [mm]
$d1$	Bigger coupling hole diameter [mm]
$d2$	Smaller coupling hole diameter [mm]
D_c	Theoretical reference value for horizontal and vertical forces [kN]
E	Young's modulus [GPa/MPa]
e_1	Smaller coupling holes horizontal distance [mm]
e_2	Smaller coupling attachment holes vertical distance [mm]
F	Minimum width of the coupling hole area [mm]
FAT	Fatigue class of the joint [MPa]
$F_{bb,Rd}$	Bearing resistance of the bolt connection [kN]
F_{hf}	Horizontal force in centre-axle trailer dynamic test [kN]
F_{hw}	Horizontal force in hinged drawbar dynamic test [kN]
$F_{p,C}$	Slipping resistance of the bolt connection[kN]
$F_{tb,Rd}$	Tension resistance of the bolt connection [kN]
f_u	The ultimate tensile strength of the base material [MPa]
f_{ub}	The ultimate tensile strength of the bolt [MPa]
F_v	Vertical test force in centre axle trailer dynamic test [kN]
F_{va}	Amplitude for vertical force in centre-axle trailer dynamic test [kN]
$F_{vb,Rd}$	Shear resistance of the bolt connection [kN]
F_{vm}	Mean value for vertical force in centre-axle trailer dynamic test [kN]
g	Gravity [m/s^2]
G	Minimum height of the coupling hole area [mm]
k_1	Correction factor for bolt connection
k_s	The hole shape factor

KV	Impact toughness [J]
L_1	Minimum length of the coupling hole area [mm]
m	Slope factor of the fatigue strength curve
N_f	Number of life cycles in fatigue
R	Applied stress ratio for 4R
R	Trailers maximum allowed mass [tons]
r	Weld toe or cut edge radius
R_{eH}	Yield strength [MPa]
R_m	Material strength for 4R [MPa]
R_{m1}	Tensile strength [MPa]
S	Vertical mass under static circumstances [kg]
T	Maximum thickness of the coupling area [mm]
T_m	Towing vehicles maximum mass [tons]
V	Theoretical reference value of amplitude of the vertical force [kN]
X	Length of the loading area of the trailer [m]
γ_{M2}	Safety factor
γ_{M3}	Safety factor
γ_{Mf}	Safety factor for fatigue calculations
$\Delta\sigma$	Nominal stress range [MPa]
$\Delta\sigma_k$	Effective notch stress range [MPa]
ν	Poisson's ratio
ρ	Density [kg/m^3]
σ_{res}	Residual strength [MPa]

ENS	Effective notch stress method
EU	European Union
FEA	Finite Element Analysis
FEM	Finite Element Method
R-O	Ramberg-Osgood material model
SWT	Smith-Watson-Topper method
TRAFI	Finnish Transport Safety Agency
UN	United Nations

1 INTRODUCTION

This master's thesis is product development project about the truck draw beam for M. Korte Oy in co-operation with Laboratory of Steel Structures at LUT University. Nowadays, more and more goods are transported from different places to another. That means these goods must be transported with some means of transport. In Finland, almost all the goods are transported with ~~a~~ trucks, which is because in Finland industry and centers of population are so scattered all over the country. Transportation by the road is very adequate way to deliver various kinds of goods from sea containers to small packages. (Logistiikan maailma 2018a).

With the trucks you can deliver goods from door-to-door and it makes transportation very easy to deliver grocery for example from central warehouses to grocery stores. Most of the deliveries by the road in Finland are door-to-door deliveries. Internationally, the road transportation is just part of the transportation chain. Trucks are well suited for different needs because various transportation structures can be built on the base frame of the truck for example, transportation structure for wood or liquids. Most transported goods are stone aggregate and log and fiber transports (Tapaninen 2018, p. 37; Logistiikan maailma 2018a).

In Finland, officials have important role in road transportation. There are three different authorities that take care of their own sector in road transportation. Finnish Transport Agency developing of transport systems, Finnish Transport Safety Agency who take care of road safety, develop it and is responsible for official duties. Ministry of Transport and Communications who take care of road conditions and under this Ministry there is regional Centre of Economic Development, Transport and the Environment who performs the duties assigned by the Ministry. (Tapaninen 2018, p. 13).

1.1 Background of the thesis

Finnish vehicle law says that truck is a vehicle which is meant and designed to deliver goods and its classification mass is over 3.5 tons. Trucks can be divided in two categories; trucks which classification mass are up to 12 tons and trucks that are over 12 tons. (11.12.2002/1090).

Restrictions for these different combinations depend on their number of axles and length. Restrictions are imposed by the government for tractor-trailers in Finland. For example, if the truck has at least nine axles its overall mass while driving on the road cannot go over 69 tons. Also, truck with two or more axle trailer maximum allowed length is 25,25m. (VPa 407/2013).

Trucks can be also categorized to different combinations and they have their own limitations. These combinations can be combined with each other and then they are called modules. These combinations are knob cars (basic truck without trailer), semitrailer combination, center-axle trailer combination and actual trailer combination. Semitrailer truck combination has at least one axle trailer. Axles on this trailer are in the back of the trailer and in front of the trailer there is a coupling ball which connects to towing vehicles with fifth-wheel coupling. These semitrailer truck combinations are mostly used in transportation between countries. Centre-axle trailer truck has at least one trailer which axle(s) are in center of trailer. Trailer has rigid drawbar which connects to towing vehicle with drawbar coupling. Actual trailer truck combination trailer that has at least 2 axles and at least one of them are located back of the trailer. In front of the trailer is at least one axle that can move in horizontal direction. This trailer has also drawbar which is stiff, vertically pivoted and is connected to towing vehicle with drawbar coupling. All the combinations for trucks are presented in figure 1. (Logistiikan maailma 2018b).

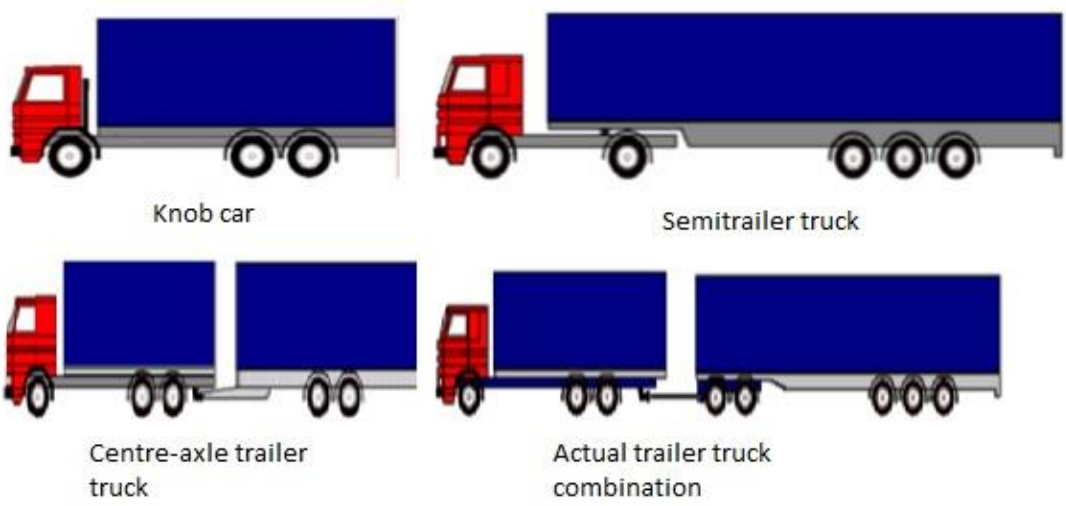

Figure 1. Different truck combinations (Logistiikan maailma 2018b).

All combinations that uses basic drawbar coupling consist from four parts and 3 of them are located back to towing vehicle and drawbar itself located in the front of the trailer. Coupling head is connected to draw beam which is connected to rear end of the towing vehicle with side plates. The draw beam itself is connected to the truck rear end with side plates with bolt joint and that is presented in figure 2 and current M. Korte Oy draw beam presented in figure 3.

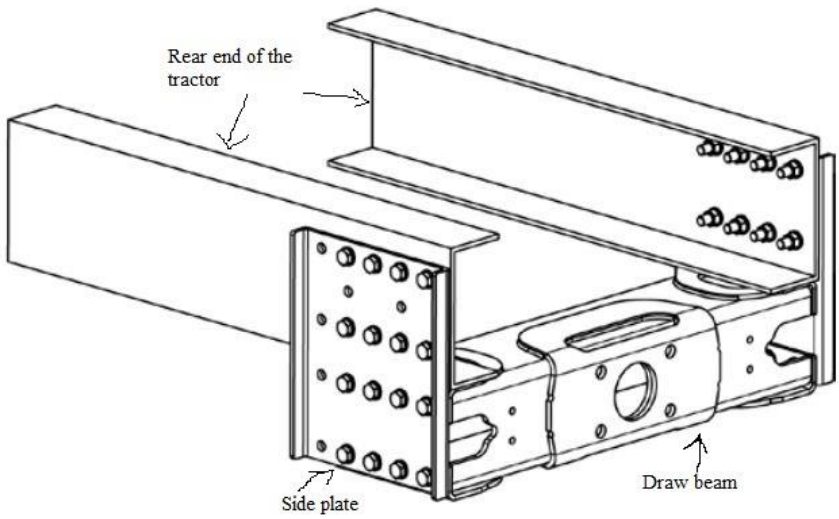

Figure 2. Draw beam connected to rear end of the towing vehicle (M. Korte Oy 2018, p. 22).

Figure 3. Current M. Korte Oy draw beam. (Draw beam 2018)

1.2 Goal, limitations and methods

This study focuses development of the truck's draw beam. Purpose is to design two different type approved draw beams. Research problem in this study is to make the draw beam without welds and with higher strength capabilities.

Goal is to redesign existing draw beam which is connected to truck frame with outside side plates and design draw beam which is connected to the truck frame with the inside connection and side plates. Part of the designing is optimization of the side plates. Development consists of designing draw beam to be simpler to manufacture, designing of the shape for the new draw beam, selection of material, strength analyzation and fatigue tests. Side plates are meant to optimize material, size, thickness and the bolt count in the bolt connection. One of the goals are to get more strength capacity for the draw beam.

The study is limited to draw beams, inside draw beam connection to the truck frame and side plates. Different truck manufactures give limitations for the size of the draw beam with the different width of their truck frames. Also in the depth direction manufacturers give limitations for the draw beam with the air pocket springs.

The study consists of three parts. First part is development outside draw beam, design inside version of the draw beam with the connection to the truck frame and optimization of the side plates then make the calculations for both of the draw beams and perform fatigue tests. Designing is executed with SolidWorks 3D modeling software, calculations with the MathCAD software and analyzations with Abaqus FEA finite element method (FEM) software. Required type approval fatigue load lifetime tests are performed by laboratory of Steel Structures at LUT.

2 THEORY

The draw beams are exposed to cyclic loading during driving and therefore they must be durable and safe to use. To ensure safe use of the draw beams, European Union has made a directive which is replaced with United Nations regulation that says the draw beams need a type approval. Theory part of this thesis consist overview of the specifications for type approved draw beam and theory behind designing requirements and strength analysis.

2.1 Structural behavior of the draw beam

The draw beam is link between the towing vehicle frame structure and the trailer. The draw beam is connected to the truck frame and the coupling head. Main purpose of the draw beam is to lead forces coming from trailer to towing vehicles frame structure.

United Nations Regulation number 55 gives some specifications for the draw beams. Values that are most essentials for the draw beam are D, D_c, S and V. These values are theoretical reference values. D value is used when trailer has drawbar that allows drawbar move in horizontal direction. D value is used in dynamic test that draw beam should pass. Value D can be calculated with following formula:

$$D = g * \frac{T_m * R}{T_m + R} \tag{1}$$

Where T_m is towing vehicles maximum allowed mass in tons, R is trailers maximum allowed mass in tons and g is gravitation acceleration. D_c, value is used when trailer has trailer that doesn't allow drawbar to move in horizontal direction. Value D_c can be calculated with following formula:

$$D_c = g * \frac{T_m * C}{T_m + C} \tag{2}$$

Where C is mass that trailers axle(s) forwards to ground in tons. Value V is "amplitude of the vertical force imposed on the coupling by the centre axle trailer" (UN E/ECE/TRANS/505/REV.1/ADD.54/REV.2). V can be calculated with following formula:

$$V = \frac{a * C * X^2}{L^2} \tag{3}$$

Where a is an acceleration depending towing vehicles suspensions, X is trailer loading area length and L is offset between center of the trailer axle assembly and drawbar eye. (UN E/ECE/TRANS/505/REV.1/ADD.54/REV.2).

There are no restrictions about dimensions or shape in Regulation number 55. Regulation 55 tells that it's forbidden to weld draw beam to the frame or to the other structures. Also draw beam must have is the standard drilling pattern for drawbar coupling. Drilling pattern in draw beam for drawbar coupling are presented in figure 4 and dimensions for different classes in table 1.

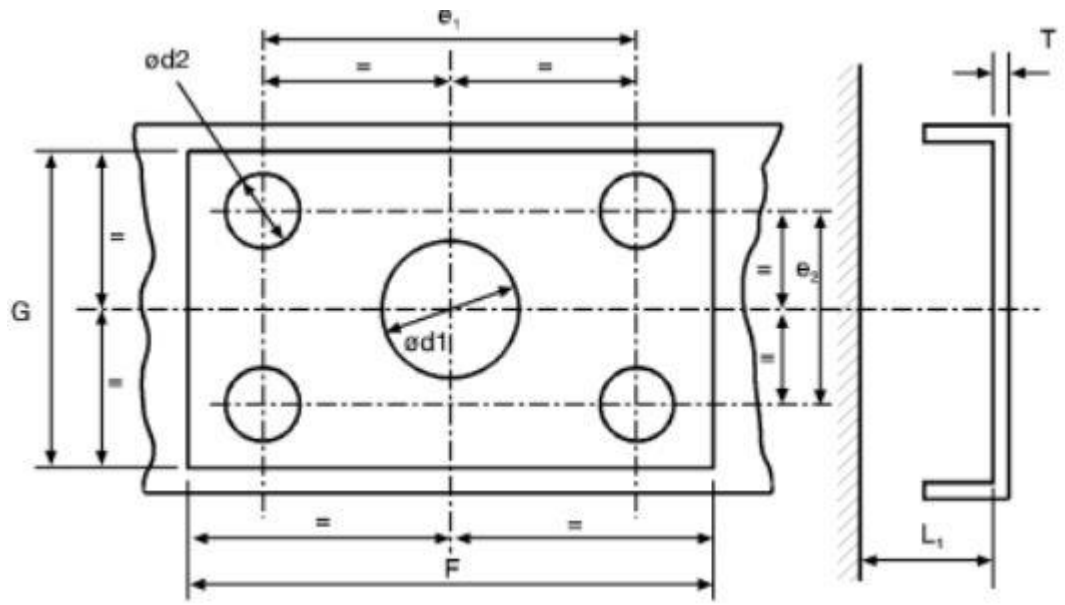

Figure 4. Drilling pattern for standard drawbar coupling. (UN E/ECE/TRANS/505/REV.1/ADD.54/REV.2)

Table 1. Dimensions for draw beam drilling pattern (mm). (UN E/ECE/TRANS/505/REV.1/ADD.54/REV.2)

	Class					
Dimen-sions	**C50-1**	**C50-2**	**C50-3**	**C50-4**	**C50-5**	**C50-6 C50-7**
e_1	83	83	120	140	160	160
e_2	56	56	55	80	100	100
d1	-	55	75	85	95	95
d2	10,5	10,5	15	17	21	21
T	-	15	20	35	35	35
F	120	120	165	190	210	210
G	95	95	100	130	150	150
L_1	-	200	300	400	400	400

Smaller holes *d2* in figure 3 and in table 1 are bolt connection for additional beam plates that give more stiffness for coupling. Inner plate has threading so that both plates can be attached to draw beam with bolts. Larger hole in the middle, *d1* in figure 3, 4 and in table 1, is for coupling head. Values e_1 and e_2 are distances between holes. *T* value is maximum thickness of the coupling area and *F*, *G* and L_1 are minimum values for the coupling space. The coupling head has jaw spindle that thread and it is attached to draw beam with outer nut. Between jaw spindle and beam plates there are also rubber grommet and control plate same as between beam plate and outer nut. Principle picture of coupling head attached to draw beam is presented in figure 5. (M. Korte Oy 2018, p. 1).

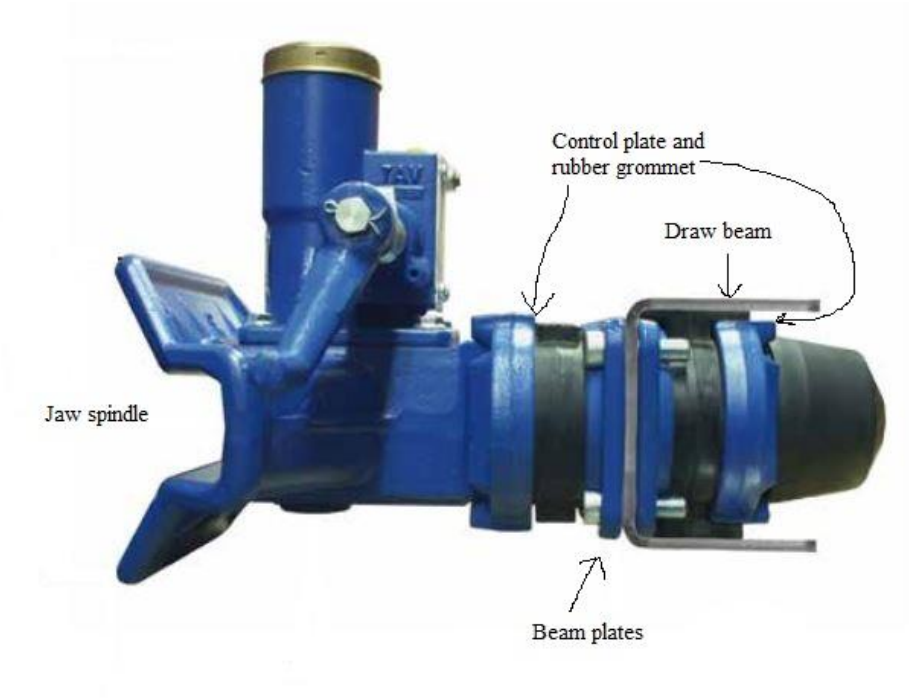

Figure 5. Coupling head attached to draw beam (M. Korte Oy 2018, p. 1).

Side plates are important attachment part of the draw beam. With the side plates the draw beam is attached to truck frame and with the side plates the draw beam can be lowered to the desired point. Truck manufacturers have different a bolt hole patterns for their frame beams where side plates are attached with bolt joint. For example, Volvo has 60 mm x 50mm bolt hole pattern for their 300 mm frame beam (Volvo 2017, p. 17).

2.2 Authority requirements for the type approved draw beam

All the new parts of the truck must have European Union type approval and it is based on regulations given by United Nations. These approvals are important for traffic safety and environmental protection. In every country there is a type approval authority who gives these approvals and in Finland it is Finnish Transport Safety Agency TRAFI.

Some parts may need inspections, measurements, tests or calculations and these things must be done by a research institute that has completed requirements given in different standards. Research institute who wants to perform testing compliance evaluation for product needs to be accepted by TRAFI and research institute must complete standard requirements given in SFS-EN ISO/IEC 17025. (11.12.2002/1090).

The type approved coupling mechanisms needs to be tested by an appointed research institute. These tests include strength tests and functional test. The worst case scenario can be determined by a theoretical examination. Strength of the part can be stated by dynamic test which is indicates fatigue lifetime of the part. Steel parts has to withstand $2 \cdot 10^6$ cycles in the dynamic test and test frequency must be under 35 hertz. In dynamic test loadings are assumed with the vertical direction towards the truck centerline and horizontal force components in longitudinal direction of the truck. Transverse forces and moments are not included if they have little significance. Force components are presented with the theoretical D and D_c values and if needed static loadings presented with S and V values. Test circumstances must be as realistic as possible and the test forces should be directed so that additional forces or moments are not generated. (UN E/ECE/TRANS/505/REV.1/ADD.54/REV.2).

The type approved draw beam is tested by a dynamic test. The draw beam that is connected to the hinged drawbar is tested with alternating force F_{hw} which can be calculated with formula 4.

$$F_{hw} = \pm 0{,}6 * D \tag{4}$$

If the draw beam is connected to the centre-axle trailer, asynchronous dynamic test where forces will be horizontal and vertical. Horizontal force goes longitudinal through the center of the coupling pin and vertical force goes through perpendicular to the horizontal force. Horizontal force is calculated with following formula:

$$F_{hf} = \pm 0{,}6 * D_c \tag{5}$$

Mean value for vertical force is calculated with following formula:

$$F_{vm} = \frac{S * g}{1000} \tag{6}$$

Where S expresses mass which makes the coupling is under static circumstances. Vertical force amplitude is calculated as following:

$$F_{va} = \pm 0{,}6 * V \tag{7}$$

These forces must be in sinusoidal shape and their frequencies must be between 1% and 3% from each other. Vertical test force is calculated with following formula:

$$F_v = F_{vm} \pm F_{va} \tag{8}$$

(UN E/ECE/TRANS/505/REV.1/ADD.54/REV.2)

2.3 Strength calculations

This study includes finite element analysis (FEA), fatigue calculations with 4R method and for the bolt connection with normal fatigue calculations. This chapter go through the theory of these methods.

2.3.1 4R method

4R method is a developed tool from 3R method for fatigue strength analysis for the welded joints and cut edges. 4R method is based on the consideration of material strength, residual stresses, weld toe or cut edge geometry and applied stress ratio. These 4 elements are the "R's": material strength (R_m), residual stresses (σ_{res}), weld toe or cut edge radius (r) which is used to obtain effective notch stress (ENS) range at the weld toe or cut edge ($\Delta\sigma_k$) and applied stress ratio (R) which is external load opposite.

4R method applies Smith-Watson-Topper (SWT) equation where external applied stress ratio is replaced with local tress ratio (R_{local}) at the weld toe or cut edge. Fatigue life is calculated with basic equation of 4R as following (Nykänen, Björk. 2015. p. 582):

$$N_f = \frac{C_{ref}}{\left(\frac{\Delta\sigma_k}{\sqrt{1 - R_{local}}}\right)^{m_{ref}}} \tag{9}$$

Where C_{ref} is reference curve of the fatigue capacity and m_{ref} is the slope of the reference curve.

$\Delta\sigma_k$ value is determined with FEA and using ENS. ENS range is calculated with stress concentration factors for membrane stress ($K_{t,m}$) and bending stress ($K_{t,b}$) and hot spot (HS) stresses which can be obtained from FEA. $\Delta\sigma_k$ can be calculated as following by Ahola et al. (2016, p. 670-682):

$$\Delta\sigma_k = K_{t,m} * \sigma_m + K_{t,b} * \sigma_b \tag{10}$$

Where σ_m is membrane stress and σ_b is bending stress.

R_{local} calculation is based on local cyclic behavior maximum and minimum values. These values can be obtained with Ramberg-Osgood (R-O) true-stress-true-strain material model, Neuber's theory and Masing type of the material model with kinematic hardening. Maximum value for local cyclic behavior with R-O curve to where residual stresses sets starting level and Neuber's theory. Combining these two allows to find local maximum stress value. 4R method principle is presented in figure 6.

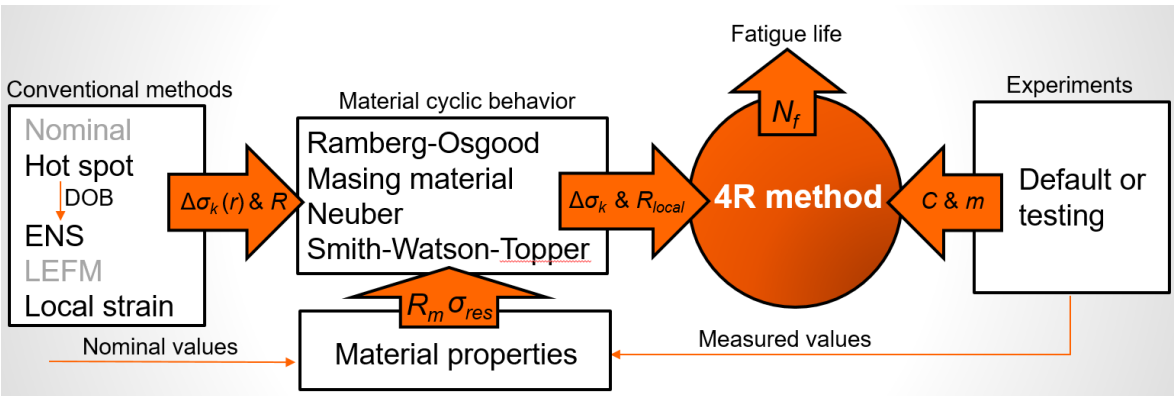

Figure 6. 4R method chart (Ahola 2018).

With the 4R method you can form a continuous S-N-curve. With continuous S-N-curve and Palmgren-Miner damage accumulation you can calculate remaining fatigue life.

2.3.2 Bolt connection

There are many different bolt connection types and in steel structures bolt, nut and washer combination is widely used. To use this kind of bolt connection you need to drill hole for the

bolt to the parts that will be attached together. Bolt will be pushed through the hole and tightened with nut so that joint lasts. Between bolt head and steel plate and nut and steel plate are generally placed washers for example to reduce surface pressure, to reduce friction to increase accuracy of tightening moment or to work as an insulator. With bolt connection it is easy to install parts together and parts that are connected with bolt connection are easier to replace than for example welded parts.

Bolt connections are divided to three categories under shearing load and to two categories under tension loading. Shearing categories are bearing type where preloaded bolts or surface requirements are not required, slip-resistant at serviceability limit state and slip-resistant at ultimate limit state whereas with last two categories preloaded bolts are used. Two first categories should be designed so that the ultimate shear load doesn't exceed the shear resistance and slip-resistant connections doesn't exceed slip resistance. Tension connections are divided to non-preloaded and preloaded connections. Shear resistance can be calculated with following formula:

$$F_{vb,Rd} = \frac{a_v * f_{ub} * A}{\gamma_{M2}} \tag{11}$$

Where a_v is depending on strength class of the bolt, f_{ub} is the ultimate tensile strength of bolt, A is the tensile stress area and depends if bolts threads are in the same direction with the shear plane then is a tensile stress area of the bolt or if the non-threaded part is in the same direction with the shear plane then is the gross cross section of the bolt and γ_{M2} is safety factor. Bearing resistance for bolt connection is calculated as following:

$$F_{bb,Rd} = \frac{k_1 * a_b * f_u * d_0 * t}{\gamma_{M2}} \tag{12}$$

Where k_1 is a correction factor for perpendicular to the direction of load for edge bolts and inner bolts, a_b is a correction factor for the direction of load, f_u is the ultimate tensile strength of the plate, d_0 is diameter of the hole and t is the thickness of the plate. Tension resistance for bolt connection is calculated with following formula:

$$F_{tb,Rd} = \frac{k_s * f_{ub} * A_s}{\gamma_{M2}} \tag{13}$$

Where the correction factor for the different bolt type is k_2 and A_s is the tensile stress area of the bolt. Slip resistance for bolt connection can be calculated as following:

$$F_{s,Rd} = \frac{k_s * n * \mu}{\gamma_{M3}} * F_{p,C} \tag{14}$$

Where k_s is hole shape factor, n is the number of friction surfaces, μ is the slip factor specified by tests for the pre-loaded bolts, γ_{M3} is safety factor and $F_{p,C}$ is controlled pretension force which can be calculated with following formula:

$$F_{p,C} = 0{,}7 * f_{ub} * A_s \tag{15}$$

(SFS-EN 1993-1-8 2005, pp. 21-33).

The bolt connection full capacity is calculated by sum of the bolts bearing resistances if the shear resistances of all of the bolt are equal or higher than bearing resistances if the bolts. And if the shearing is lower than the bearing resistance the number of bolts is multiplied with the lowest resistance value depending which one is lower. (SFS-EN 1993-1-8 2005, p. 31).

The hole locations are defined in standard. End distance e_1 and edge distance e_2 of hole should be more than $1{,}2d_0$. Minimum spacing p_1 between bolt holes are $2{,}2d_0$ and spacing p_2 minimum is $2{,}4d_0$ and these distances and spacing are presented in figure 7. (SFS-EN 1993-1-8 2005, pp. 24-25).

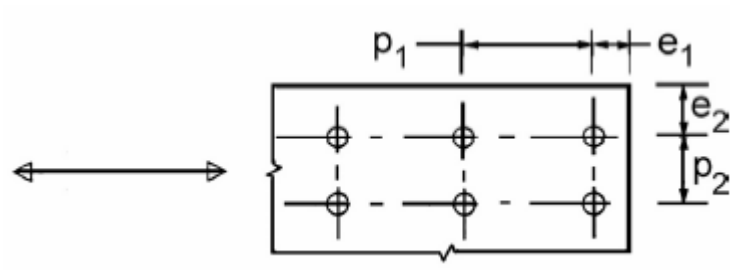

Figure 7. Spacing for bolt connection. (SFS-EN 1993-1-8 2005, p. 25)

When the bolt connection is under cyclic loading end distance e_1 and edge distance e_2 should be at least 1,5d_o and spacing p_1 and p_2 between holes should be more than 2,5d_0. (SFS-EN 1993-1-9 2005, p. 20)

The bolt connection or the bolt can suffer from a two different types of fatigue. These are nominal stress fatigue and fretting fatigue which is explained in chapter 2.3.3. The nominal stress fatigue lifetime can be calculated as following (SFS-EN 1993-1-9 2005, p. 14):

$$N_f = \left(\frac{FAT}{\gamma_{Mf} * \Delta\sigma}\right)^m * 2 * 10^6 \tag{16}$$

Where N_f is number the cycles that the bolt connection or bolt will last, γ_{Mf} is safety factor depending on criticality of the fatigue failure which is presented in figure 8, $\Delta\sigma$ is stress range calculated the part of the external load that goes for bolt divided by gross of net cross-section area of the one bolt row or the bolt depending on *FAT* class which is standard experimental value of the capacity of the connection or the bolt and *m* is slope factor of the fatigue strength curve. (SFS-EN 1993-1-9 2005, pp. 14-20)

Assessment method	Consequence of failure	
	Low consequence	High consequence
Damage tolerant	1,00	1,15
Safe life	1,15	1,35

Figure 8. Safety factor for fatigue strength. (SFS-EN 1993-1-9 2005, p. 11).

3 DESIGN OF DRAW BEAM

Current draw beam is made from many cut sheet parts that are welded together. Purpose is to design the new draw beam that is made with laser cutting from steel and then bended to desired shape. Connections between different parts will be either with bolt connections or with rivets. That will make draw beam easier and cheaper to manufacture. Designing includes two different bolt connection types for the draw beam. First one is the side plate connection from outside the truck frame and the second one is connection where draw beam is connected to truck frame from the inner side.

The draw beam strength capacity is presented with different values which are presented in chapter 2.1. Most essential values are D and D_c and they can be calculated with formulas 1 and 2. These formulas depend only on the maximum mass of the truck and the trailer. One of the designing goal is to get D value up to 220 kN so it would have capacity carry up to the trucks and the trailers combined maximum mass of 90 tons. The new value for the D_c is designed to be 190 kN.

3.1 Selection of material

Steel is typical material solution for structures that are under heavy loading. Steel has good strength properties and with high strength steels you might be able to use thinner plate thickness and make application lighter.

Current draw beam is made from Raex 355 MC optimum steel which is basic structural steel (Aulomaa 2018). It is a basic structural steel which has yield strength 355 MPa and ultimate tensile strength between 510-680 MPa. The draw beam lengths are between 742 mm and 885 mm and weights are between 46 kg and 52 kg (M. Korte Oy 2018, p. 17). The bolt connection uses M16 10.9 bolts.

All the parts of the draw beam are made from steel. The draw beam should be light from the weight viewpoint and should be durable so it lasts at least 2 million life cycles in the type approval test and has high strength properties from the endurance viewpoint. High strength steels are very suitable for this kind of material property needs. The draw beam is supposed

to make with squaring from the laser cut section and connected to the side plates with the bolt connection. The bolt connection holes gives some restrictions for bent edges. The hole centers must have at least certain distance (details given in chapter 2.3.2) between them. If the hole is located too near to the bent edge it could due to forming of the hole and making it to misalignment with the other bolt connection hole. In the table 2 is presented material properties for high strength SSAB STRENX steels.

Table 2. Material properties for SSAB STRENX steels over 6 mm thickness. (SSAB 2015).

Name	Yield strength R_{eH} [min MPa]	Tensile strength R_{m1} [MPa]	Min. inner bending radius
600 MC	600	650-820	1.4*t*
650 MC	650	700-850	1.5*t*
700 MC	700	750-950	1.6*t*
700 MC Plus	700	750-950	1*t*
900 MC	900	930-1200	3*t* for < 8mm < 3.5*t*
960 MC	960	980-1250	3.5*t*
1100 MC	1100	1250-1450	4*t*

As from the table 2 can see all the high strength steels has quite high inner bending radius minimums except 700 MC Plus steel. As SSAB describes at their introduction to 700 MC Plus steel: “It is typically used in highly demanding applications that require superior cold-formability, high impact toughness also in cold conditions and the ability to cut mechanically.” (Strenx 700 MC Plus 2018). The draw beams are in use around all year and that’s why 700 MC Plus is quite good choice for this kind of application what needs high strength and high impact toughness also in cold conditions. More material properties for 700 MC Plus are presented in table 3. In table 3 CET/CEV means carbon equivalent of the steel alloy. The holes for the bolt connection are cut by laser.

Table 3. Material properties for 700 MC Plus. (Strenx 700 MC Plus 2018).

Name	Symbol	Value
Density	ρ	7800 [kg/m^3]
Young's modulus	E	210 [GPa]
Poisson's ratio	v	0.3
Impact toughness at -40°C	KV	40 [J]
Elongation min	A_5	13 [%]

Table 3 continues. Material properties for 700 MC Plus. (Strenx 700 MC Plus 2018).

Name	Symbol	Value
CET/CEV		0.24/0.38

Most suitable material for draw beam is 700 MC Plus for its machinability and bendability so it is the choice for material of the draw beam. The side plates and stiffener for the draw beam will be made from same material as itself the draw beam. The bolts are normally M16 threaded 10.9 strength class galvanized steel bolts but might vary depending on truck manufacturers. Strength class 10.9 means that bolt ultimate tensile strength is 1000 MPa and yield strength 900 MPa. The rivets are 10 mm diameter steel with cheese head.

3.2 The draw beam and the side plates design

Shortest existing draw beam is 742 mm and longest 885 mm. The height of the draw beam is 198 mm and depth is 260 mm, respectively. It has eight 17 mm diameter holes for the bolt connection. Draw beam has welded stiffeners at the coupling hole connection and at the ends for the bolt connection. Dimensional drawing of the current draw beam is presented in figure 9.

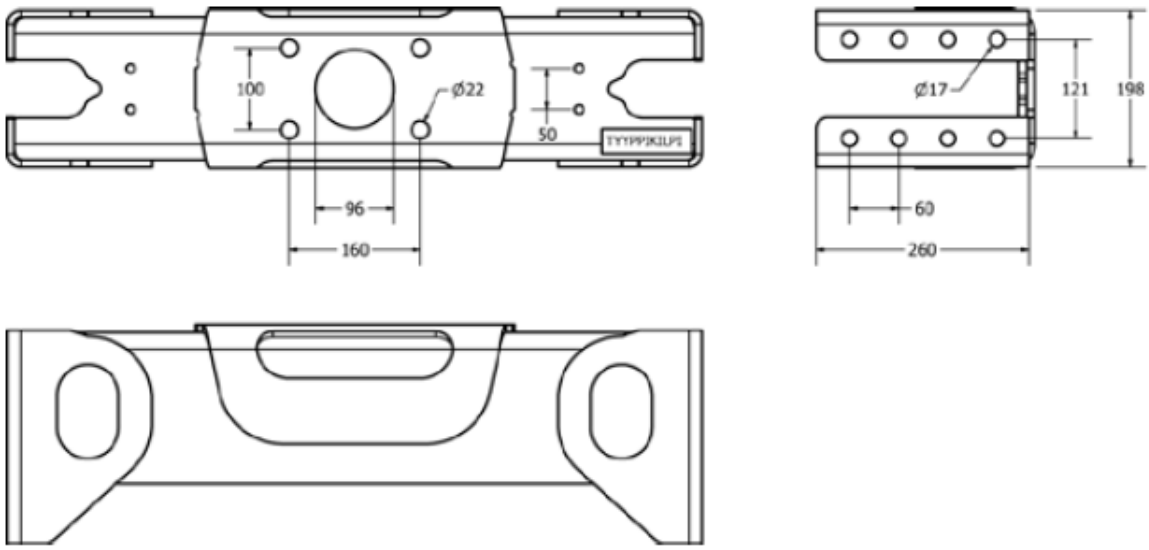

Figure 9. Dimensional drawing of the current draw beam (M. Korte Oy 2018, p. 17).

3.2.1 The outer draw beam

The draw beam length vary between 742 mm to 900 mm depending on which manufacturers truck it will be installed. The draw beam with stiffener weight varies between 37 kg and 44 kg. The draw beam will be cut with laser from steel sheet and is bent to U shape with bent ends where is holes for bolt connection to side plates. The draw beam is supported to be more stable with stiffener which is connected to draw beam itself with rivets. Front of the draw beam is standard connection the coupling head. The coupling hole pattern is following ISO3584 Cat 3 (160x100 mm) standard. The bolt connection to the side plates are made with M16 bolts so both ends of the draw beam will have 17 mm diameter holes for the bolts. Both ends of the draw beam have 7 holes with 50 x 60 mm pattern for the bolt connection and these holes are located in the bent ends. The draw beam is presented in figure 10 and dimensional drawing in figure 11.

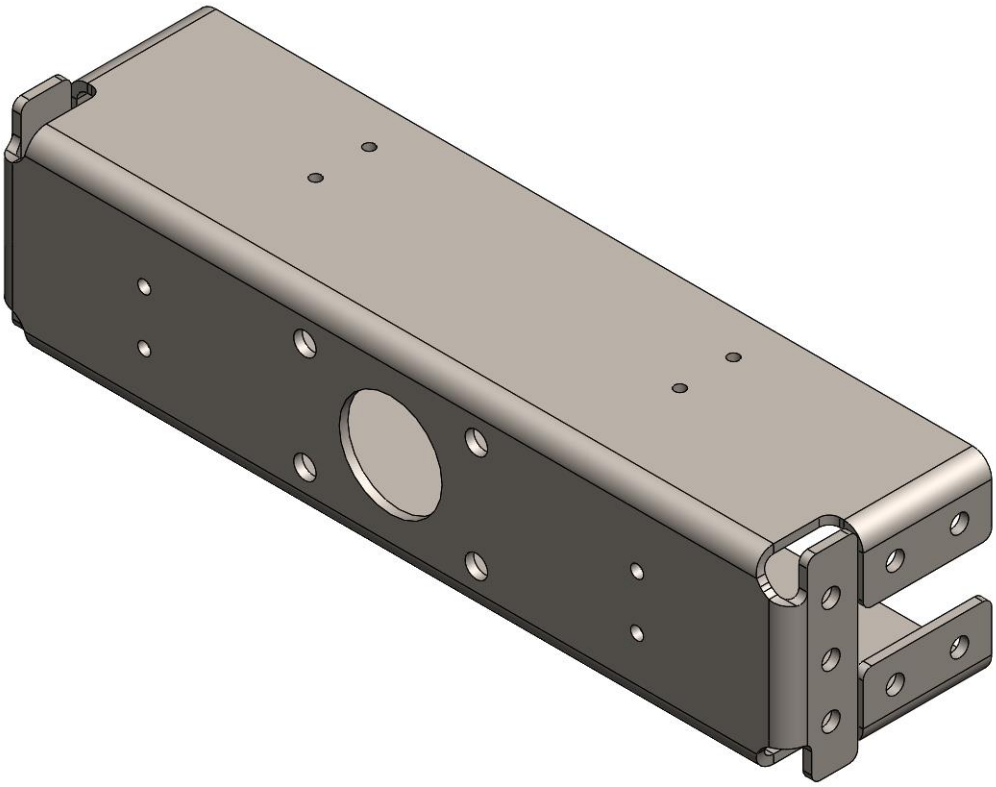

Figure 10. The outer draw beam.

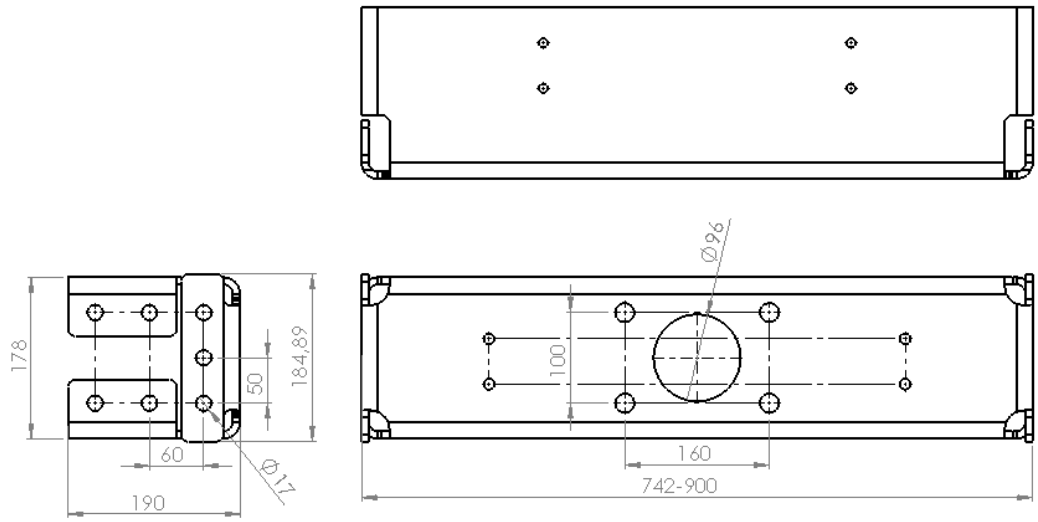

Figure 11. Principal dimensional drawing of the draw beam.

The side plates are 8 mm thick plate with holes for different type bolt connections. The side plates used in the tests has a little bend in front side of the plate. Bottom end of the plates have 17 mm holes with 50 x 60 mm hole pattern for bolt connection to the draw beam. Upper end of the plates will have hole pattern depending on which manufacturers truck frame it will be connected. For example Scania trucks have 50 x 50 mm hole pattern with a diameter of 14.8mm (Scania CV AB 2003, p. 20). Volvo uses 60 x 50 mm hole pattern with a diameter of 17 mm (Volvo Trucks North America 2017, p. 17). Length of the side plates will vary depending how far from the trucks frame beams the draw beam will be installed. In the figure 12 is presented whole assembly for the outer draw beam with side plates. The bolt connection has 7 per side between the draw beam and the side plates and 9 bolts per side between the side plates and the truck frame beam.

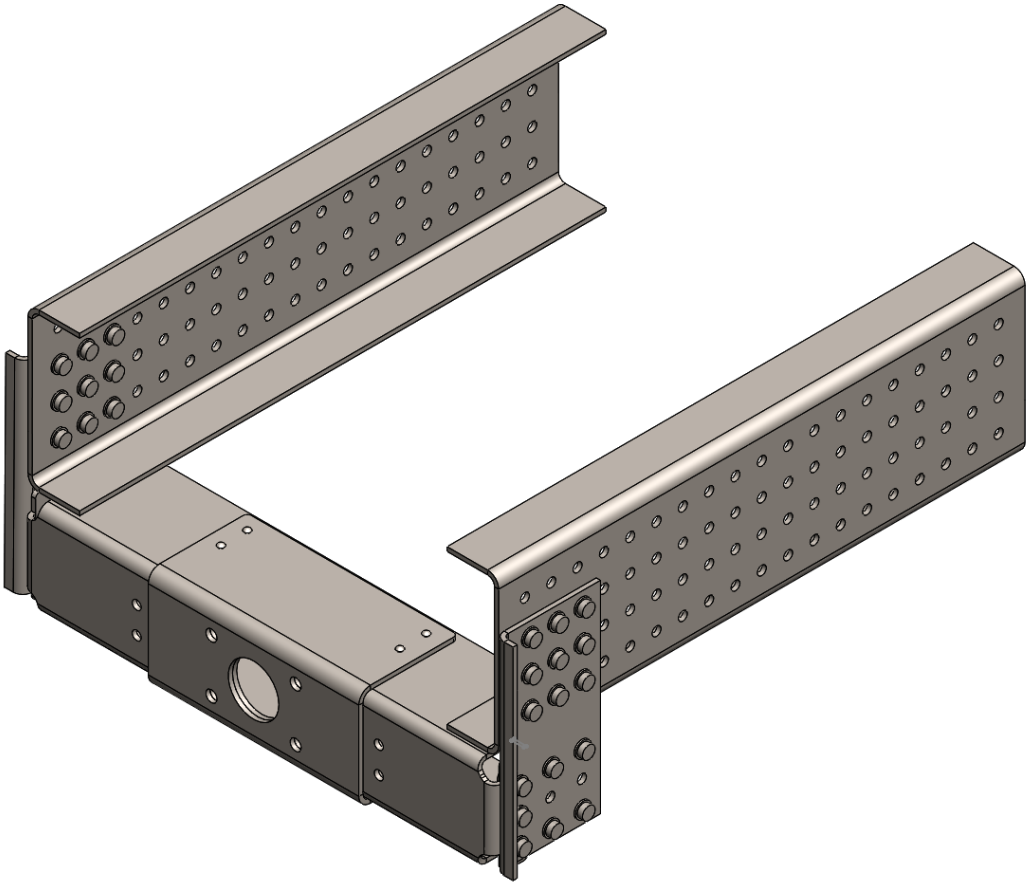

Figure 12. Draw beam assembly.

3.2.2 The inner draw beam

The inner draw beam is smaller and with slightly simpler bendings as the outer draw beam and connection to the truck frame will be from the inside. The draw beam itself doesn't differ from the outer draw beam except it is smaller. It is also bended from the laser cut sheet. The draw beam has same ISO3584 Cat 3 coupling hole pattern for the coupling head and same 17 mm diameter holes for bolt connection. The draw beam has 8 holes per side for the bolt connection to the side plates. The side plates have 4 holes per side plate to connect with the cross beam. The cross beam has 7 holes per end to connect with truck frame beams. Inner draw beam is presented in figure 13.

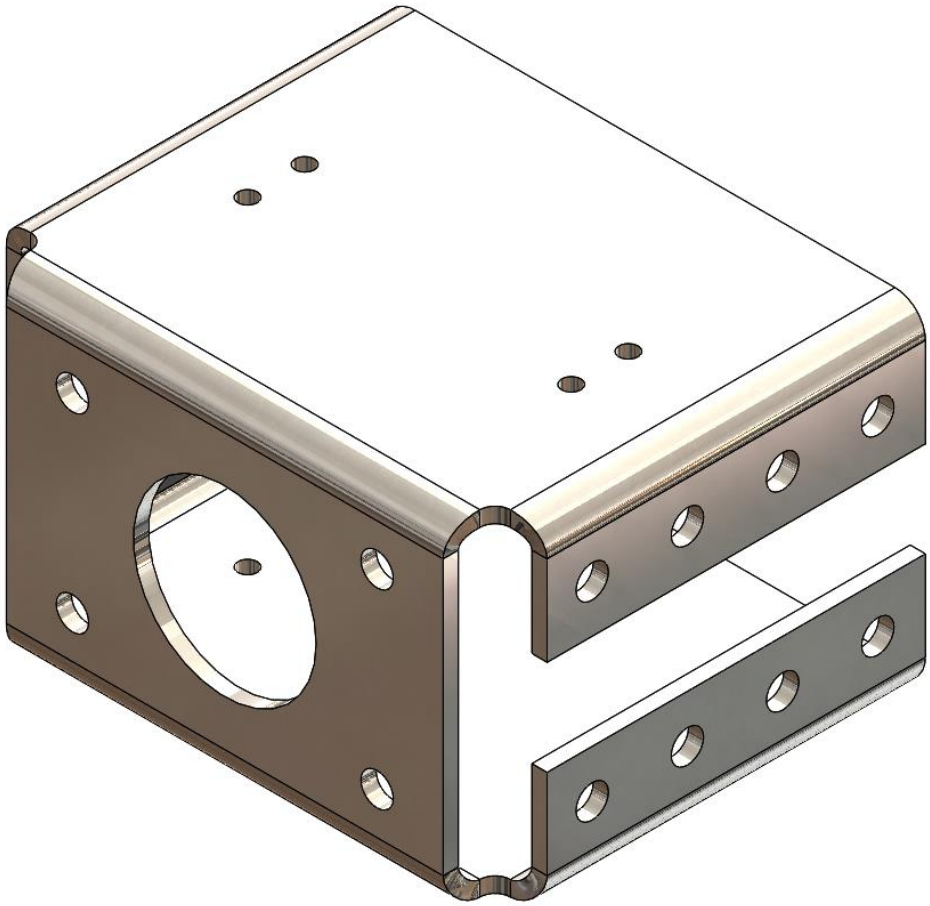

Figure 13. Inner draw beam.

The inner draw beam dimensions are 284 mm width and 226 mm depth. Weight of the inner draw beam with stiffener is 18 kg. The principal dimension drawing is presented in figure 14.

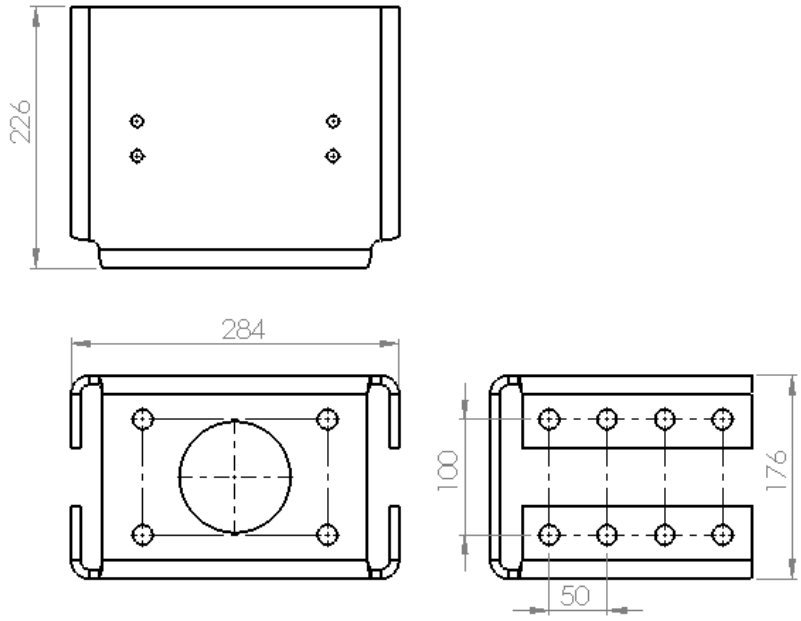

Figure 14. The principal dimensions of the inner draw beam.

The inner draw beam system will consist two side plates. With the side plates you have option to lower the draw beam 60 mm from the truck frame beam. The side plates are made with bending from 10 mm steel plate. The side plates are connected to a cross beam which cross between truck frame beams. The cross beam is connected to inside of the truck frame beams. This cross beam is made with bending from 10 mm steel plate. The cross beam is presented in figure 15. The cross-beam has 50 mm hole at the left side of the beam when looking from the trailer side of the draw beam assembly. Purpose of the hole is to get electric wiring for the lights more easily. All the joints are made with the bolt connection with M16 bolts. This bolt connection has 8 bolts per side plate to the draw beam, 4 bolts to the cross-beam per side plate and 7 bolts per side at connection between the truck frame beam and the cross-beam. The inner draw beam system is presented in figure 16.

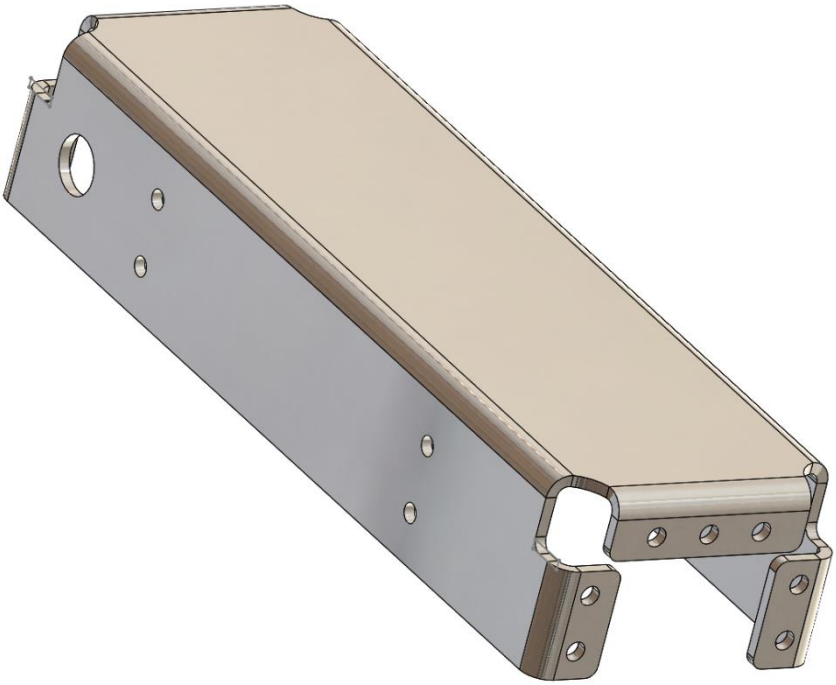

Figure 15. The cross beam between truck frame beams.

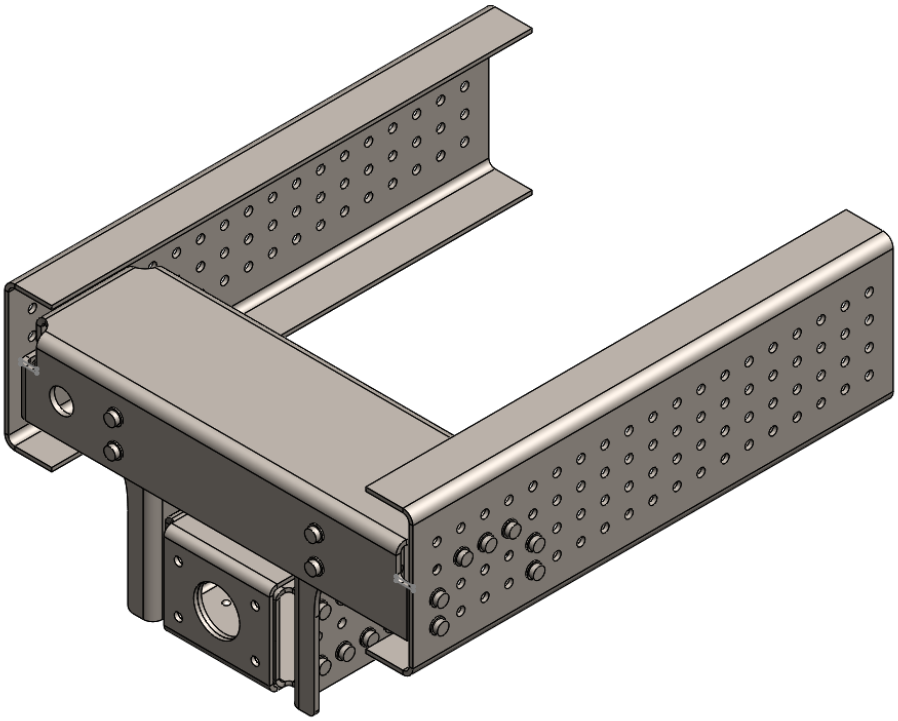

Figure 16. The inner draw beam assembly.

3.3 Manufacturing and installation

All bent parts are bent so that they are bent just a little bit over the 90 degrees. With this method outer radius edges get compression residual stresses from the springback effect. This increases fatigue life of the bent edges that might get under larger stresses. Also all the cutting should be done with good quality to avoid plate edge fatigue fractures.

The draw beam installation process starts from installing the stiffener to draw beam and then the bolt connections to the side plates and truck frame beams. The stiffener is attached with rivets to the draw beam. This is only step that are made before selling draw beam to the customer. The bolt connections with the side plates and truck frame beam are made at the actual installation site to the truck frame beams. The inner draw beam assembly installation differs a bit from the outer one. First the cross beam is installed to truck frame beams, then the side plates to the draw beam and lastly connect the side plates to the cross beam.

4 STRENGTH ANALYSIS OF DRAW BEAM

Finite element analysis was made with Abaqus FEA software using 6.14 version using its own Abaqus/Standard solver. Numerical calculations were made with MathCAD. FEA was made to check possible stress concentration points before fatigue tests and find if draw beam needs more stiffeners.

4.1 Finite element analysis

FEA was used to check possible critical points before the experimental tests so that the draw beam would bear required 2 million cycles at dynamic test. FEA was also used to design test equipment so that all the required test could be done with one test equipment set. All the analyses were made with test force.

4.1.1 Set up for the finite element analysis

Finite element analyses were made with solid elements. Element type was C3D8R which means 8-node linear brick element and calculated with reduced integration. For all the parts, except the bolts and rivets, approximate global size was set to 16 mm. For the bolts and the rivets, element size were set to 8 elements per quarter of the bolt or the rivets circumference. The bolts and the rivets were modeled so that they were one solid component. With these conditions and depending on how the partition were made there were about 140000 elements and 190000 nodes in the 742 mm long draw beam assembly and in the 900 mm long draw beam assembly there were about 145000 elements and 195000 nodes. The inner draw beam assembly has about 195000 elements and 265000 nodes. The fully meshed 900 mm draw beam assembly is presented in figure 17.

FEA was made with one step where all the external loads began to affect to the assembly. At the initial step all the contacts were created and propagated to the first actual step. For the contact properties, tangential behavior and normal behavior were set. Tangential behavior was set to penalty friction formula with 0.4 friction coefficient. Normal behavior was hard contact with pressure-overclosure and allowing separation after contact.

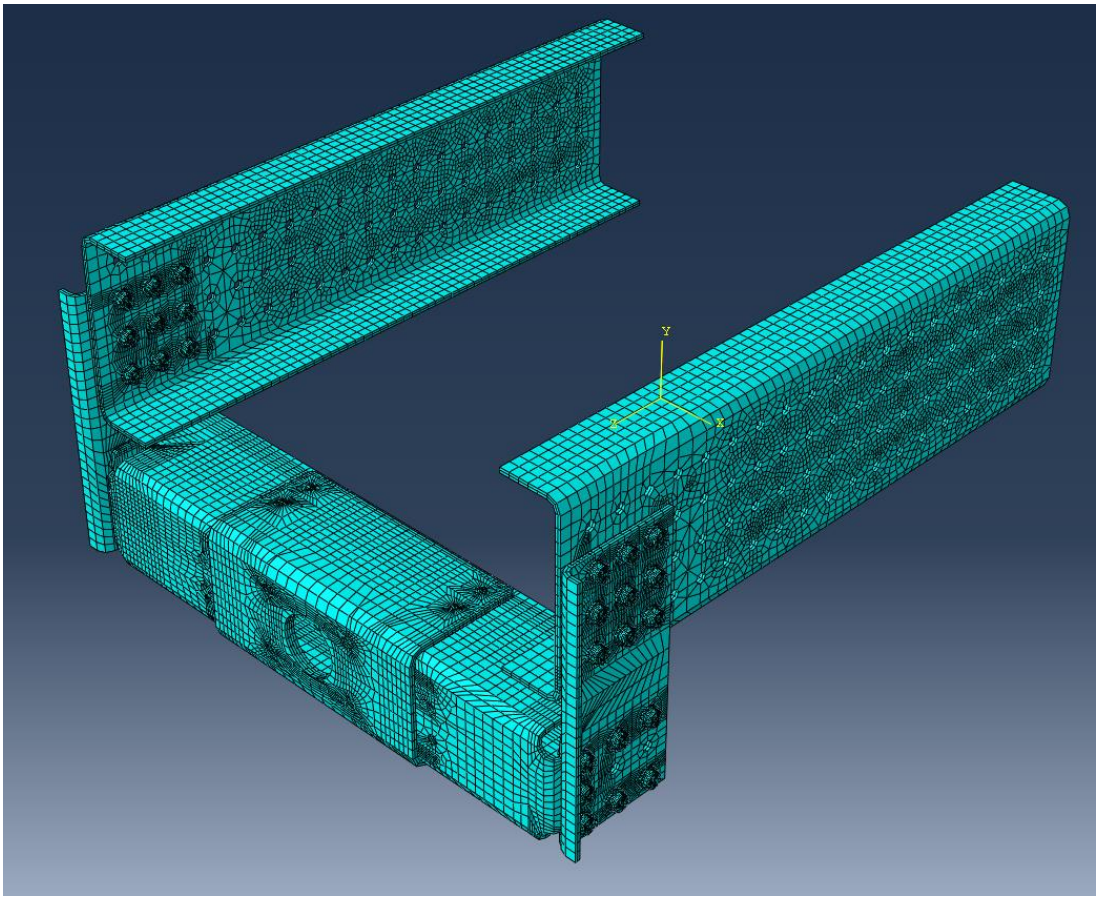

Figure 17. The fully meshed 900mm draw beam assembly.

Load for 1-axial analyses was set to be 132 kN horizontal force which is same as the test force needed for the 220 kN *D* value. Test force is calculated with formula 4. The test force was placed as pressure for the area where coupling device would connect. For the pushing load, pressure was located outside of the draw beam and for the pulling load inside of the draw beam. All bolts were pre-tensioned to 200 Nm moment which means 62.5kN as a pre-tension force. The bolt forces were activated at the initial step from time 0 to 0.1 s, the main force was activated after 0.1 s. Boundary conditions were set to be fixed at the end the truck frame beam. Loads and boundary conditions are presented in figure 18. Main load is presented with pink arrows, bolt load with yellow arrows and boundary conditions with orange blue axis marks. The inner draw beam assembly had similar loads and boundary conditions than the outer one.

Loads for 2-axial forces was set to be 90 kN horizontal force and vertical force 9.81±30 kN which are needed for D_c value 150 kN. In vertical force value *V* was set to be 50 kN and

value *S* was 1000 kg. These loads were calculated with equations 5-8. Vertical load was set to be 190 mm from the coupling hole to reflect the position of the drawbar eye. Horizontal load was set with beam element which was connected to rigid body element which was connected to the edges of coupling hole. For the analysis loads was chosen to be pushing loads horizontal towards the draw beam and vertical towards the ground and pulling loads away horizontally from the draw beam and vertically to the sky. Placement of the pushing loads are presented in figure 19.

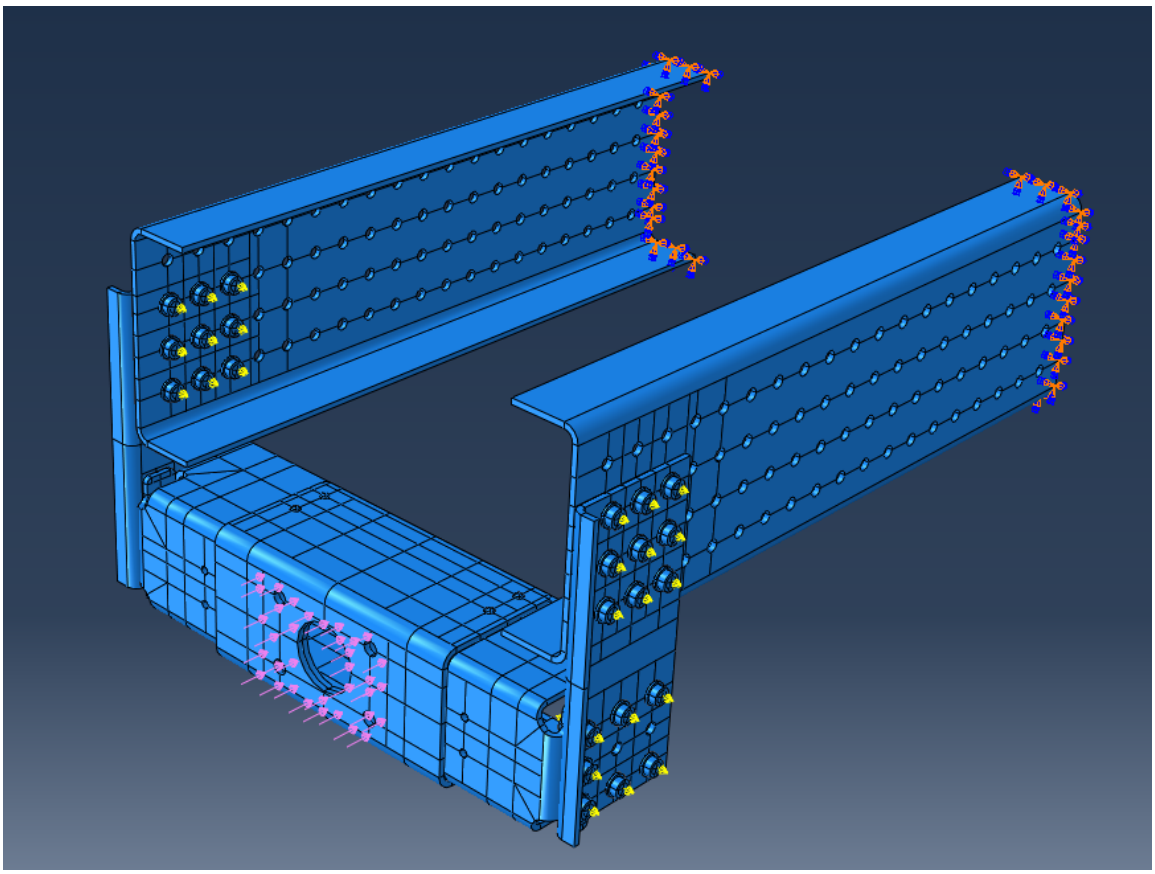

Figure 18. The loads and the boundary conditions for the FEA. Location of bolt forces highlighted with yellow color and external loads shown in magenta color.

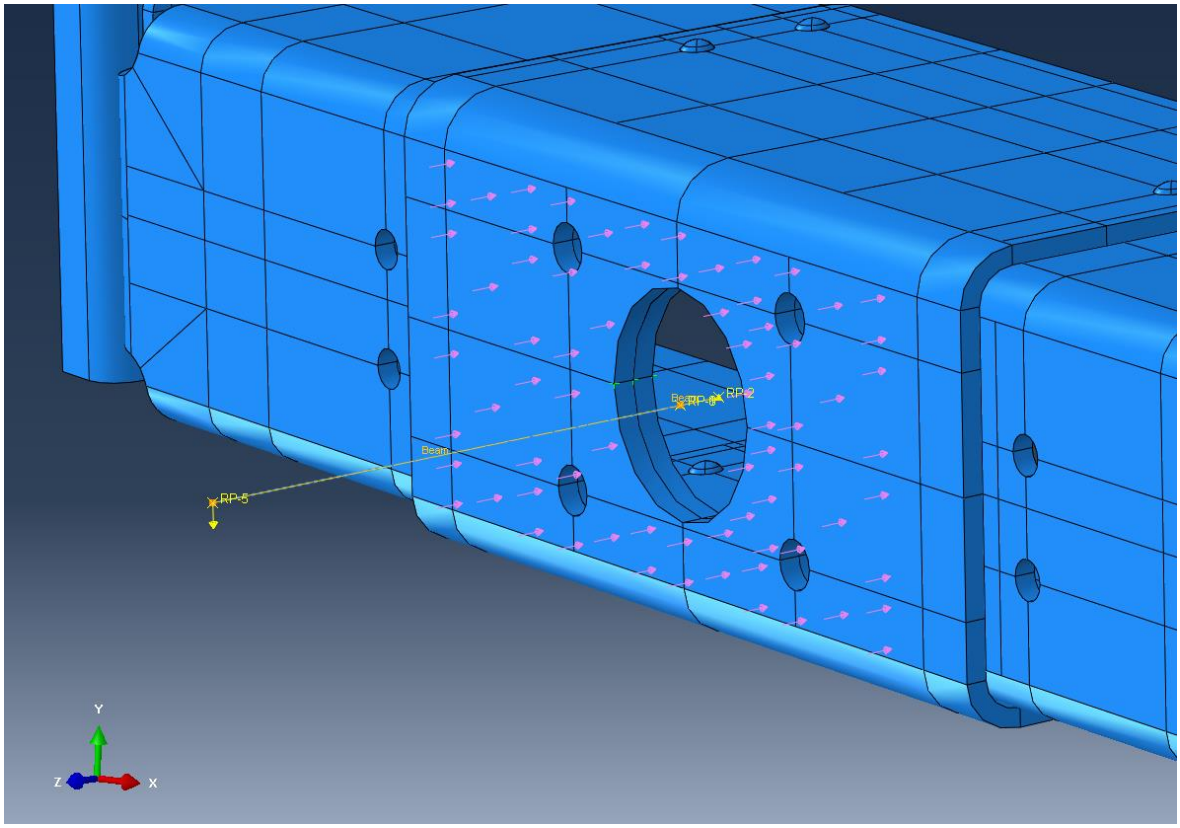

Figure 19. 2-Axial pushing loads.

4.1.2 FEA of the outer draw beam assembly

The outer draw beam assembly results were quite same with 742 mm and 900 mm draw beam lengths. Results from the 1-axial FEA with *D* value of 220 kN for the both of the outer draw beam assemblies are collected in table 4. There are used abbreviations for the locations of the results in table 4 and they are placed to the figure 20 from the pushing load and figure 21 from the pulling load. These points are most interesting fatigue capacity points and they had most stresses at the model if you don't include stresses that are not in the middle of the plain area. General max principal stress state is also presented in following figures 20-23 and colors are scaled from 350 MPa which means red to -100 MPa which is dark blue. Deformation when the force pushed the draw beam is presented in figure 22 and with pulling force in figure 23. These figures are scaled 20 times from the normal deformation. Deformation forms are similar with 742 mm draw beam and 900 mm draw beam.

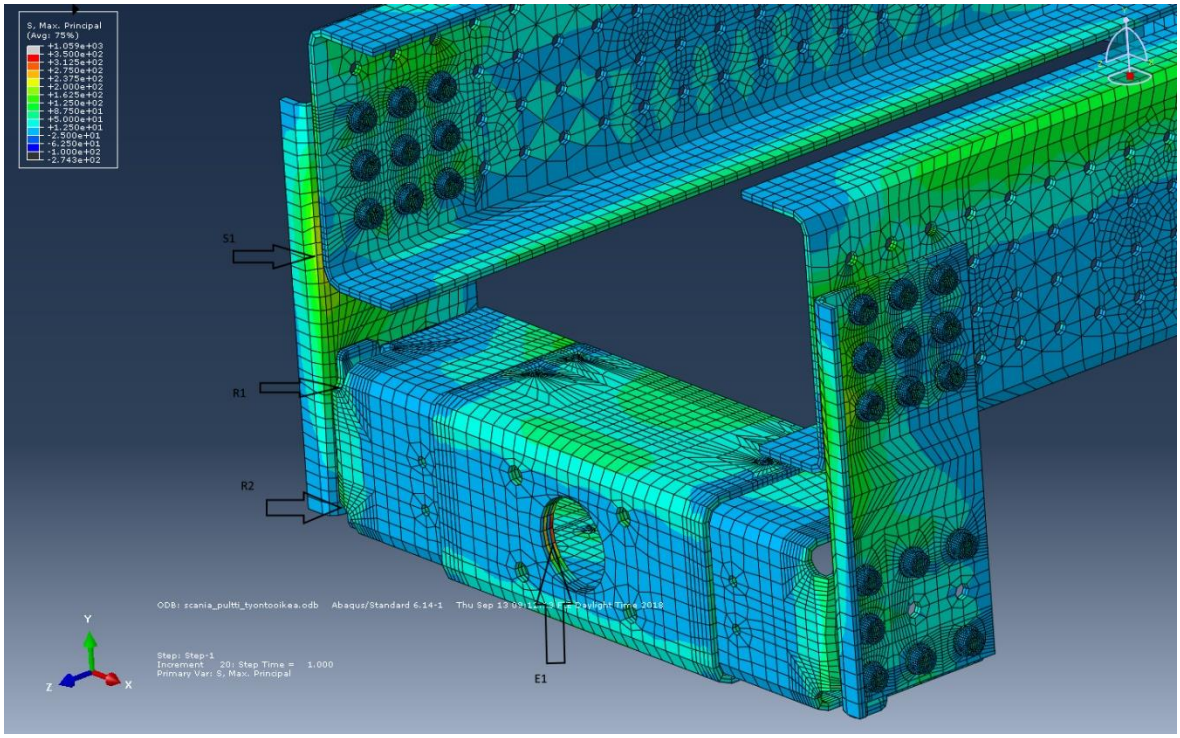

Figure 20. The outer draw beam FEA measurement point locations and abbreviations with 1-axial pushing load.

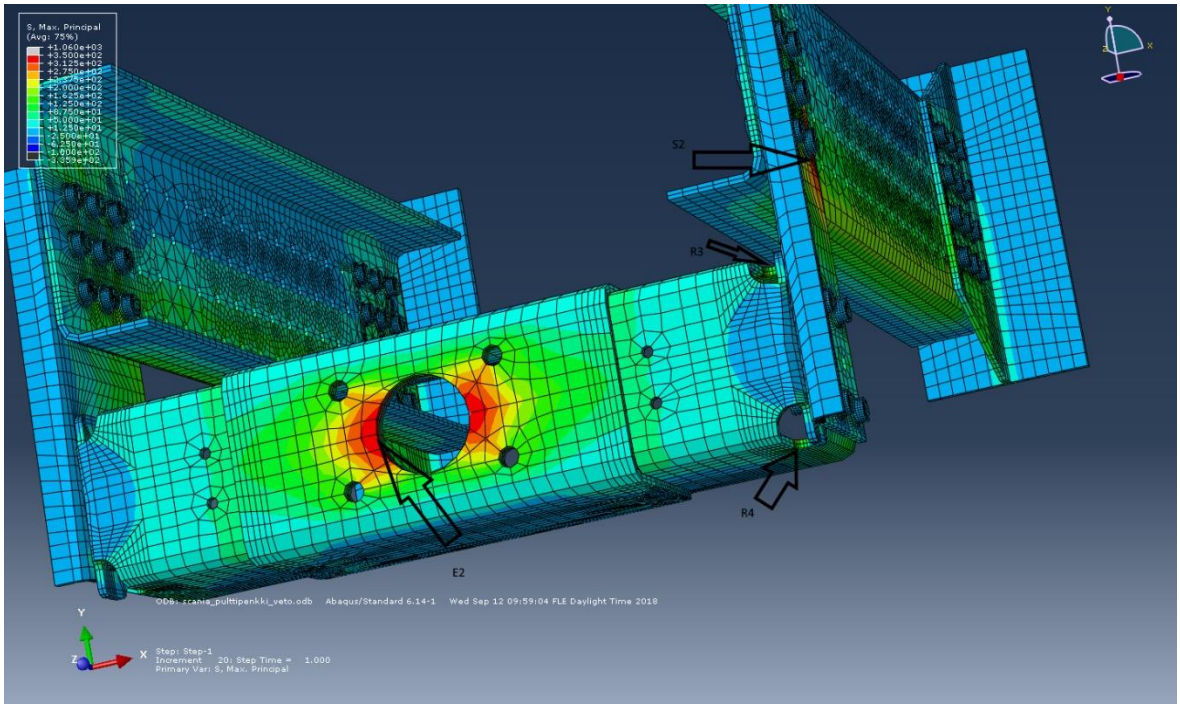

Figure 21. The outer draw beam FEA measurement point locations and abbreviations with 1-axial pulling load**.**

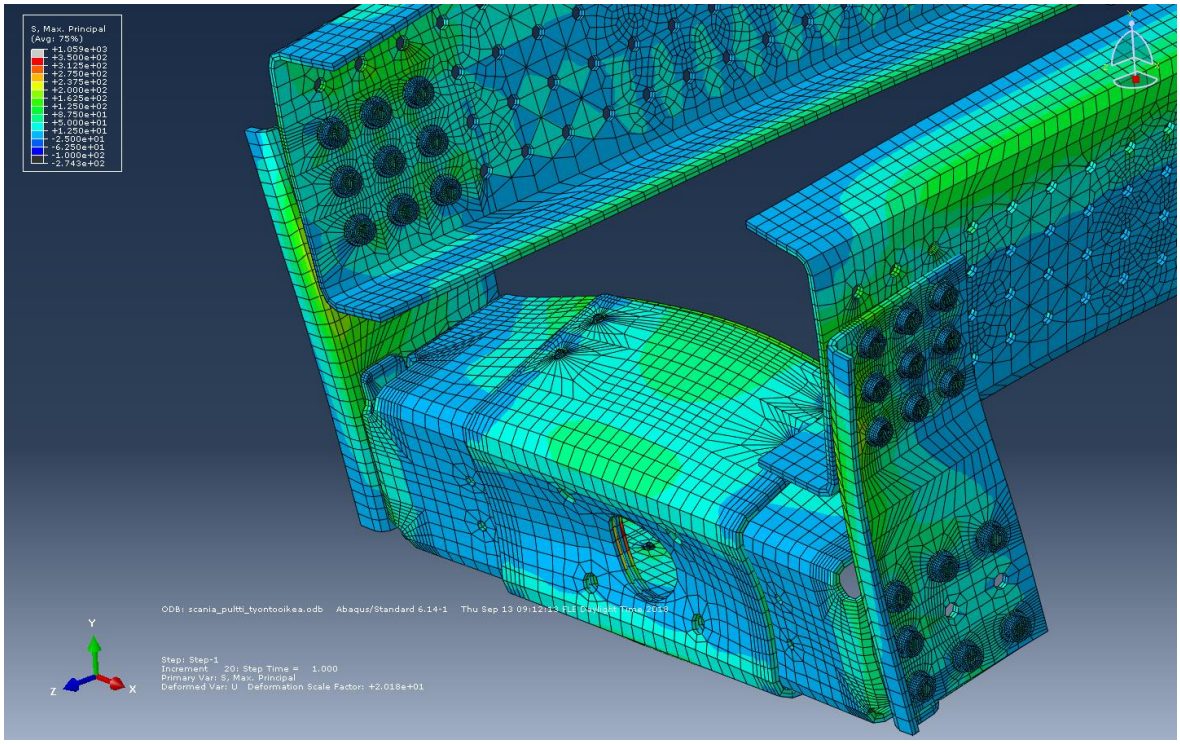

Figure 22. Scaled deformation picture with 1-axial pushing load.

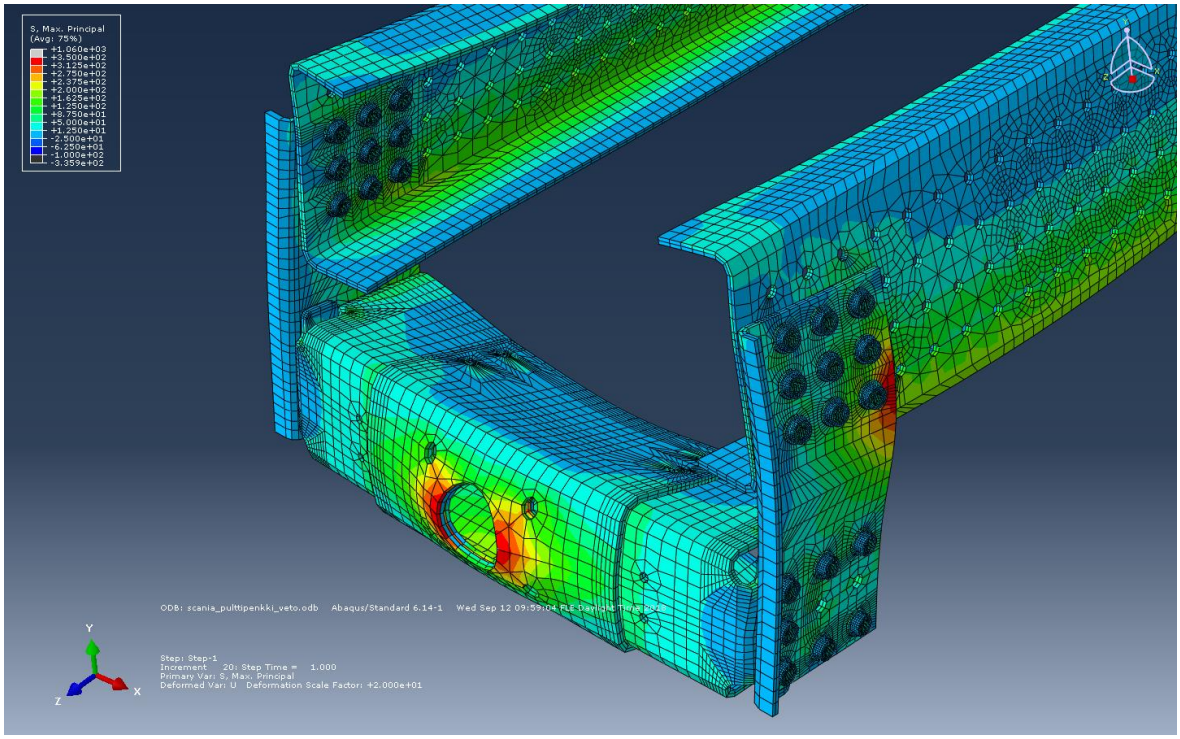

Figure 23. Scaled deformation with 1-axial pulling load.

Table 4. Max principal stresses and displacements at checking points with 1-axial test load.

Checking point	Max. Principal Stress [MPa]	Displacement X-direction [mm]	Displacement Y-direction [mm]	Displacement Z-direction [mm]
742_E1	314	0.1	-4	-5.10
742_R1	108	-0.04	-4.01	-2.44
742_R2	116	-0.04	-4	-3.95
742_S1	224	-0.71	-3.9	-0.93
742_E2	336	0.09	4.16	5.46
742_R3	184	0.18	3.27	2.26
742_R4	190	0.21	3.46	4.06
742_S2	352	0.56	2.25	0.81
900_E1	303	0.04	-3.02	-4.53
900_R1	106	0.11	-3.02	-1.91
900_R2	108	0.11	-3.01	-3
900_S1	184	-0.52	-2.92	-0.76
900_E2	256	-0.12	3.14	4.56
900_R3	180	-0.01	2.46	1.91
900_R4	117	-0.006	2.6	3.36
900_S2	333	0.65	1.57	0.89

2-axial FEA was executed with D_c value of 150 kN and the results at the checking points are presented in table 5 and the checking points are presented in figures 24 and 25. Deformations with pushing loads and pulling loads are presented in figures 26 and 27 Deformations are quite same with the 742 mm draw beam and with the 900 mm draw beam. Deformation figures are scaled 20 times from the normal deformation.

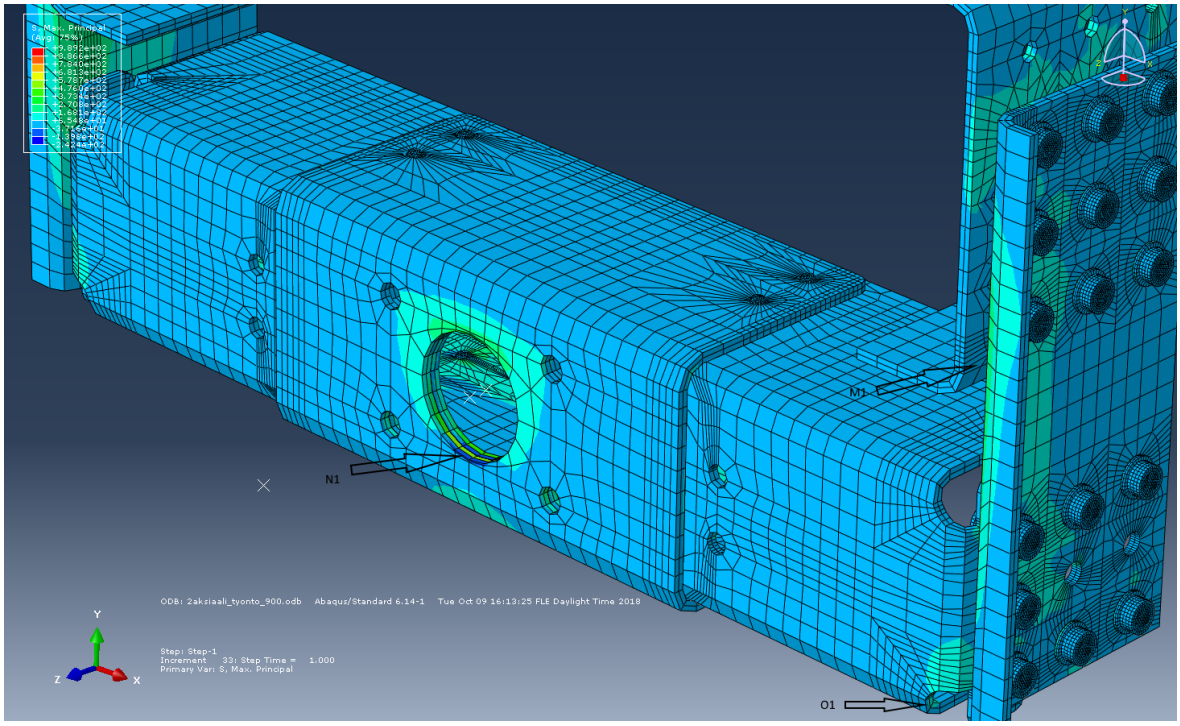

Figure 24. The outer draw beam FEA checking point locations and abbreviations with 2-axial pushing loads.

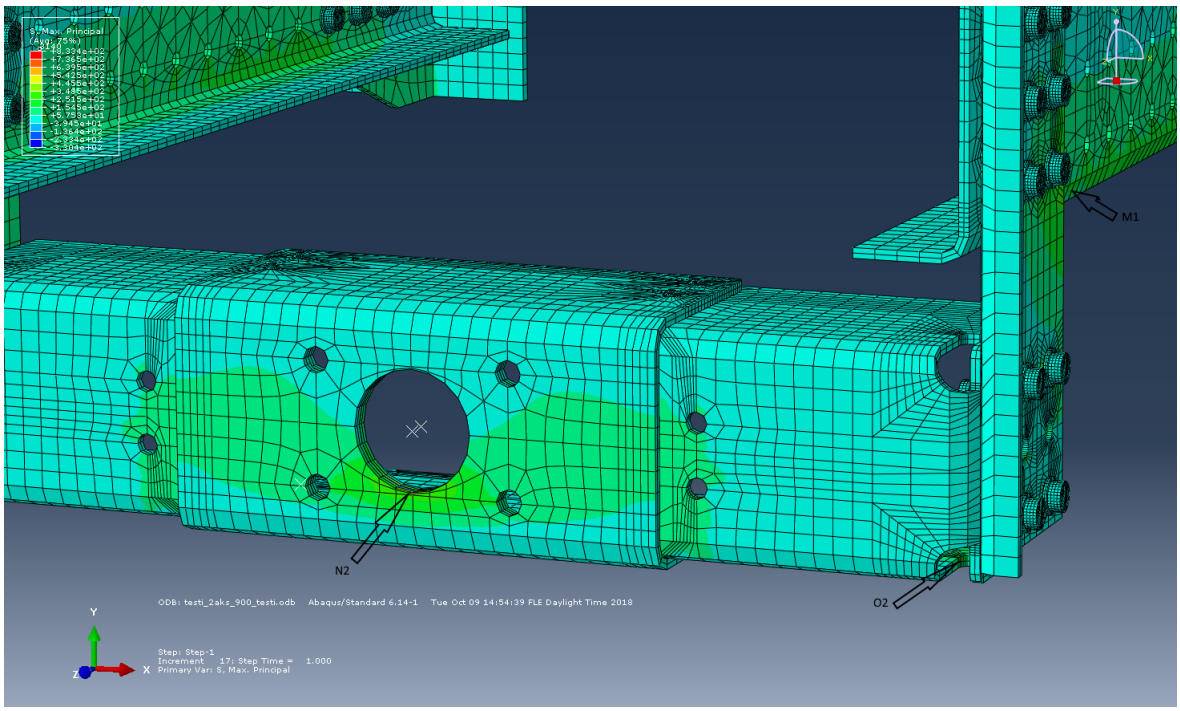

Figure 25. The outer draw beam FEA checking point locations and abbreviations with 2-axial pulling load.

Table 5. Max principal stresses and displacements at checking points with 2-axial test loads.

	Max. Principal Stress [MPa]	Displacement X-direction [mm]	Displacement Y-direction [mm]	Displacement Z-direction [mm]
742_N1	925	-0.05	-5.46	-4.99
742_M1	241	0.8	-5.15	-0.83
742_O1	144	-0.12	-5.35	-4.59
742_N2	645	-0.02	3.62	3.57
742_M2	298	0.48	2	0.86
742_O2	195	0.01	3.01	3.22
900_N1	540	-0.05	-5.64	-5.91
900_M1	233	1.33	-5.18	-1.17
900_O1	137	-0.18	-5.33	-4.57
900_N2	377	-0.01	3.72	4.24
900_M2	298	0.48	2	0.86
900_O2	188	0.02	2.99	3.2

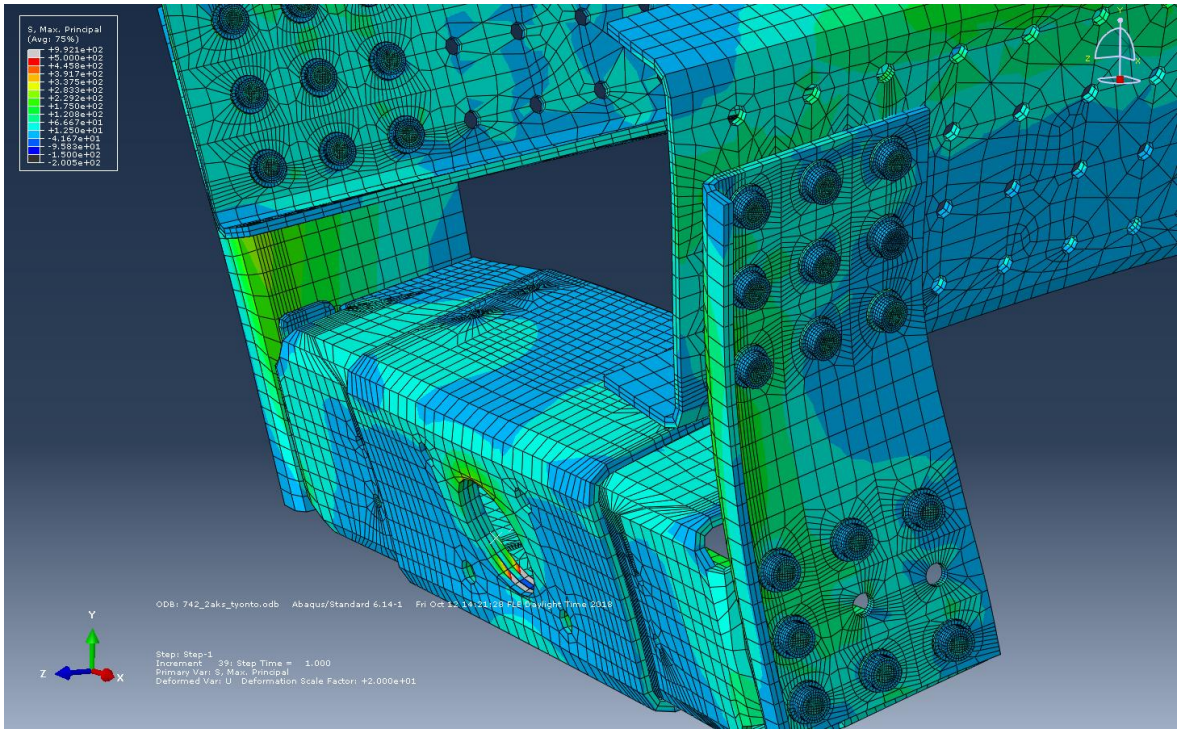

Figure 26. Scaled deformation with 2-axial pushing loads.

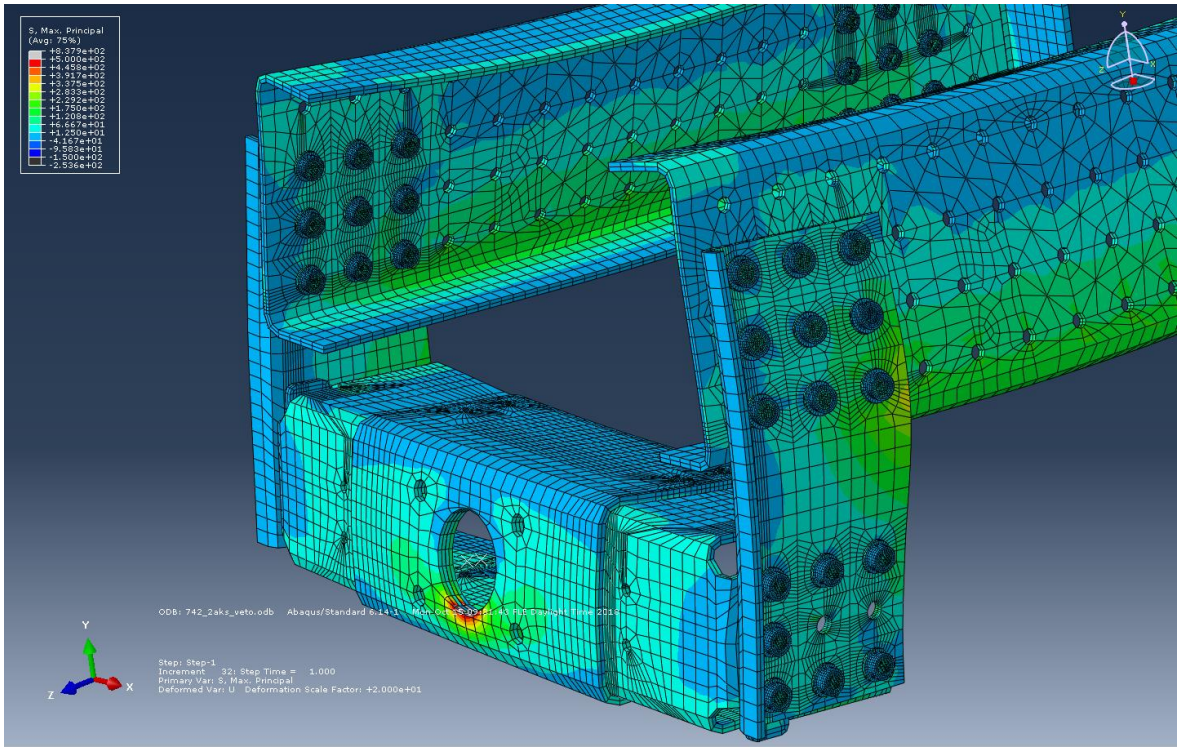

Figure 27. Scaled deformation with 2-axial pulling loads

4.1.3 FEA of the inner draw beam assembly

The inner draw beam assembly FEA analysis were made with same test loads as the outer draw beam assembly which were D value 220 kN and D_c value 150 kN. Results for 1-axial test at the checking points are presented in table 6 and locations of those points are presented in figure 28. In these figures are presented max principal stress state and its colors are scaled from -100 MPa dark blue to 500 MPa red.

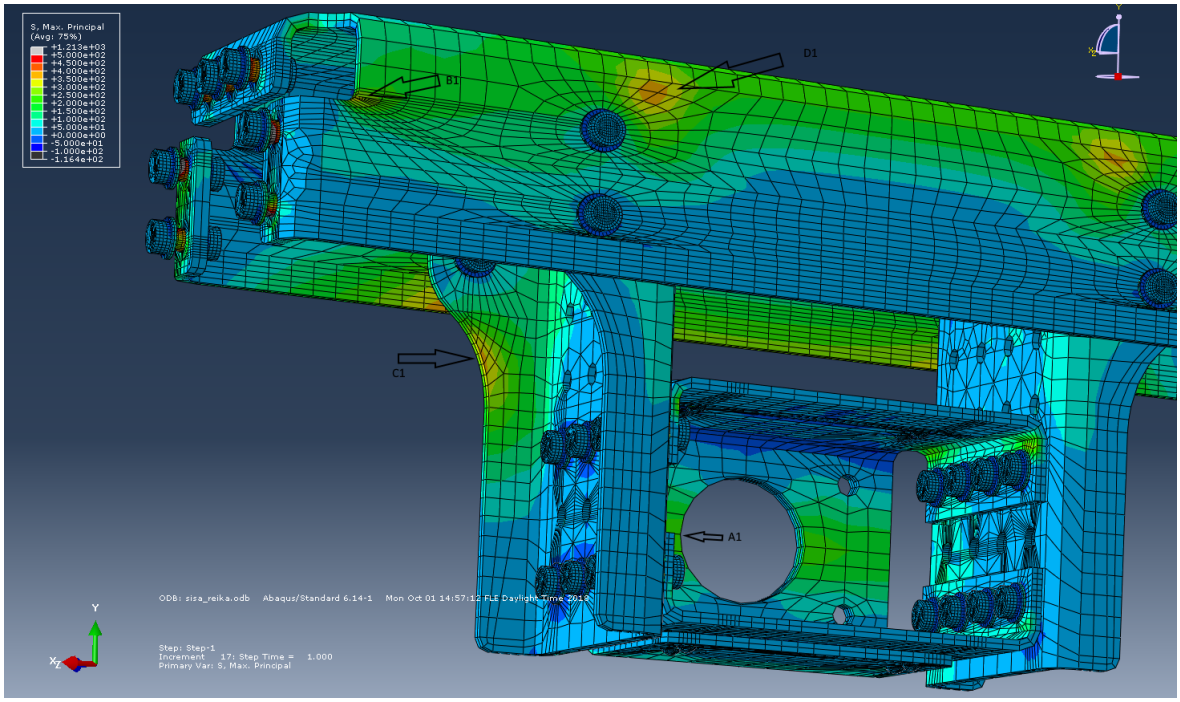

Figure 28. The inner draw beam FEA checking point locations and abbreviations with 1-axial pushing load.

Deformations with pushing and pulling loads are presented in figures 29 and 30. Deformations are scaled 20 times from the real deformation.

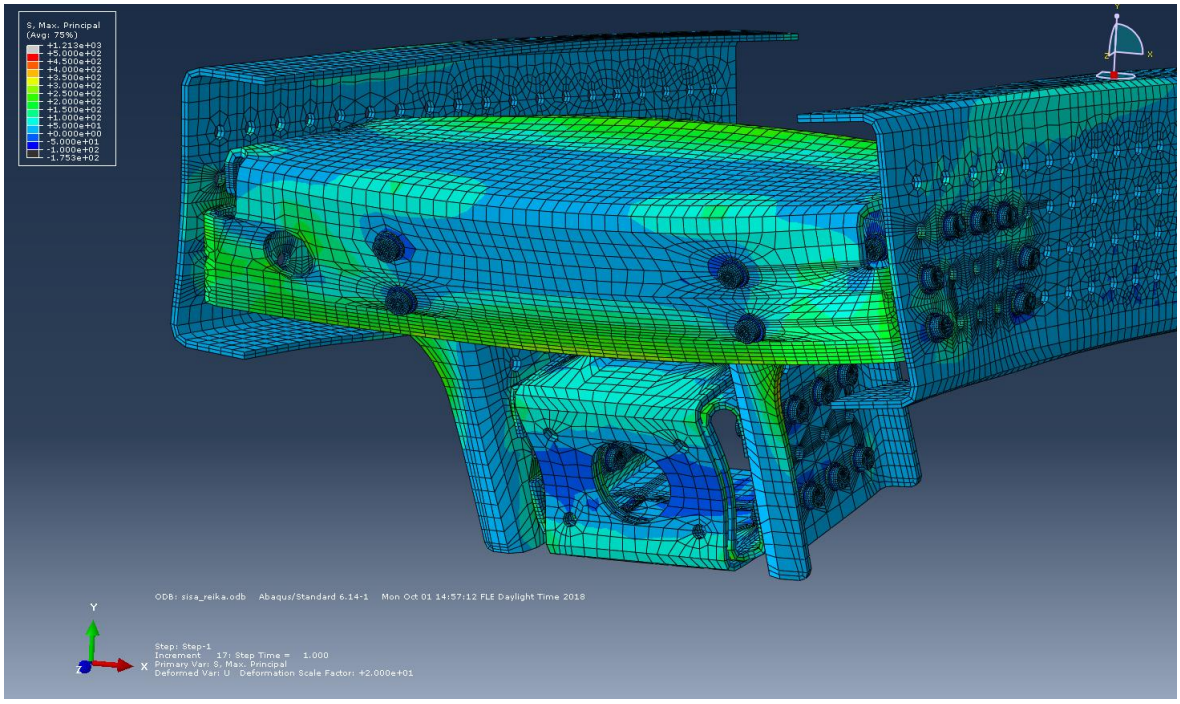

Figure 29. Scaled deformation picture with 1-axial pushing load.

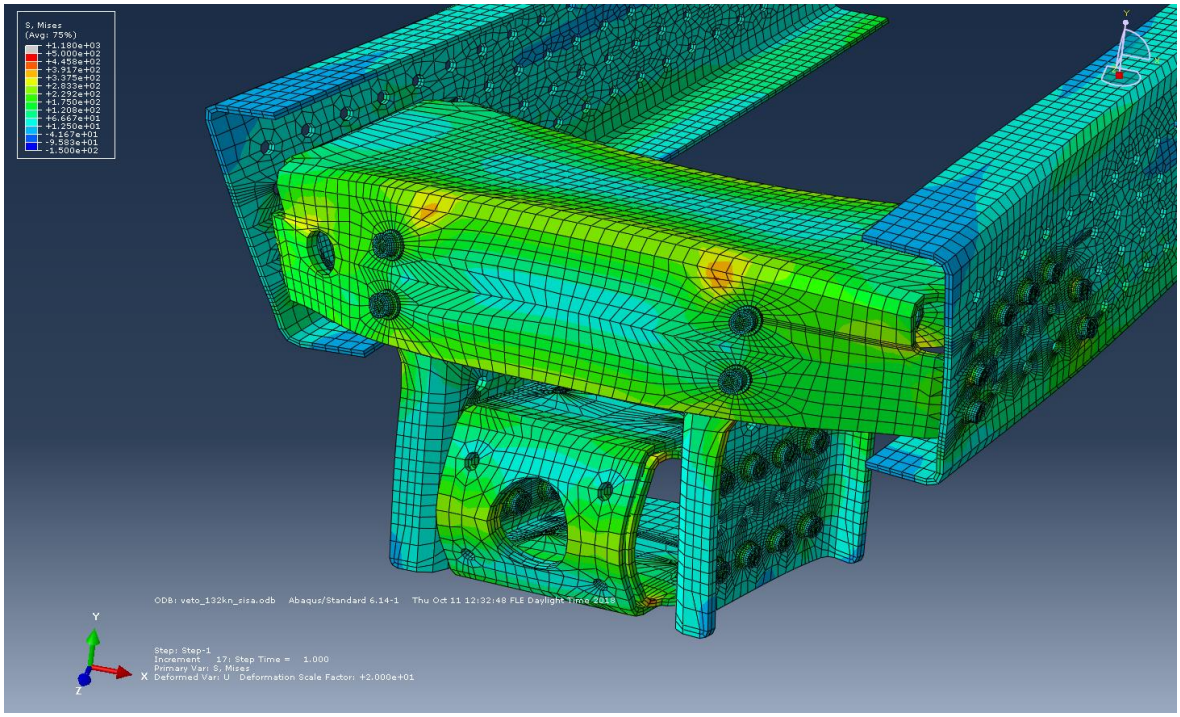

Figure 30. Scaled deformation with 1-axial pulling load.

Table 6. Max principal stresses and displacements at checking points with 1-axial test load.

	Max. Principal Stress [MPa]	Displacement X-direction [mm]	Displacement Y-direction [mm]	Displacement Z-direction [mm]
A1	114	0.007	-2.73	-7.55
B1	354	0.08	0.06	-0.14
C1	305	0.9	-2.49	-4.75
D1	220	0.16	1.33	-1.39
A2	291	0.01	2.95	7.97
B2	282	0.2	1.84	0.26
C2	333	0.48	-0.97	4.95
D2	398	0.24	2.9	1.13

Results for the 2-axial test FEA are presented in table 7 with D_c value of 150 kN. Locations of the checking points and abbreviations are presented in figures 31 and 32.

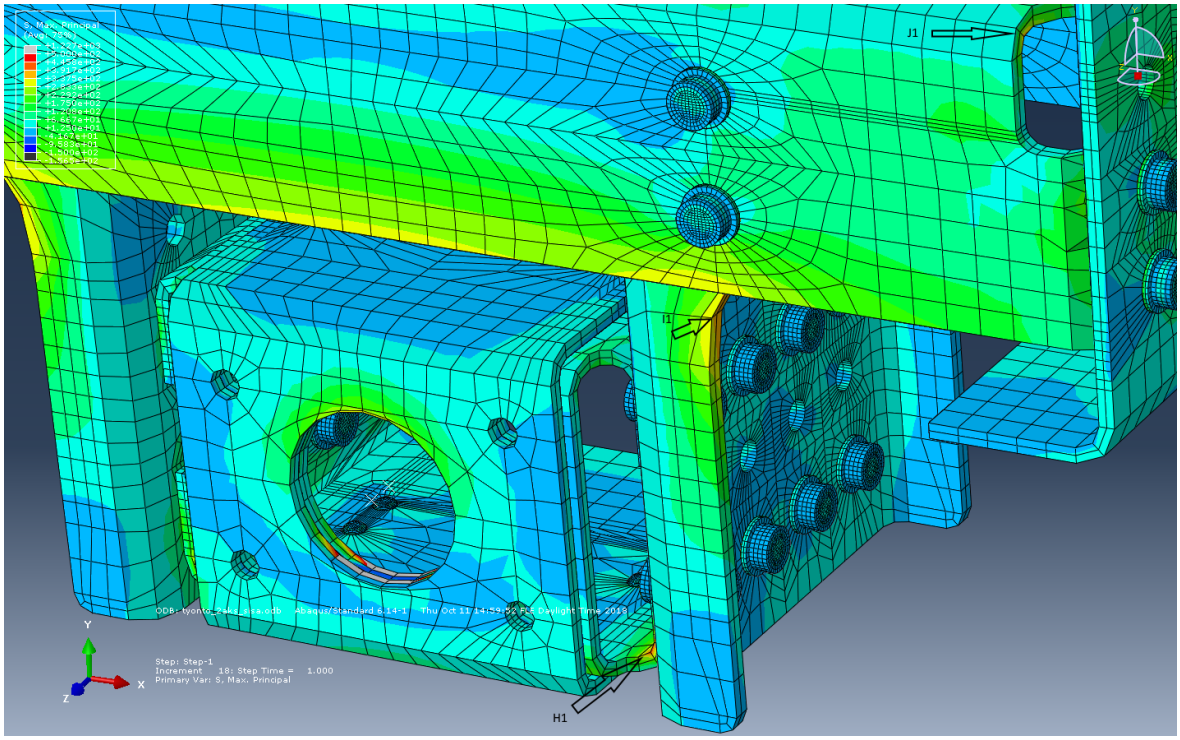

Figure 31. The inner draw beam FEA checking point locations and abbreviations with 2-axial pushing load.

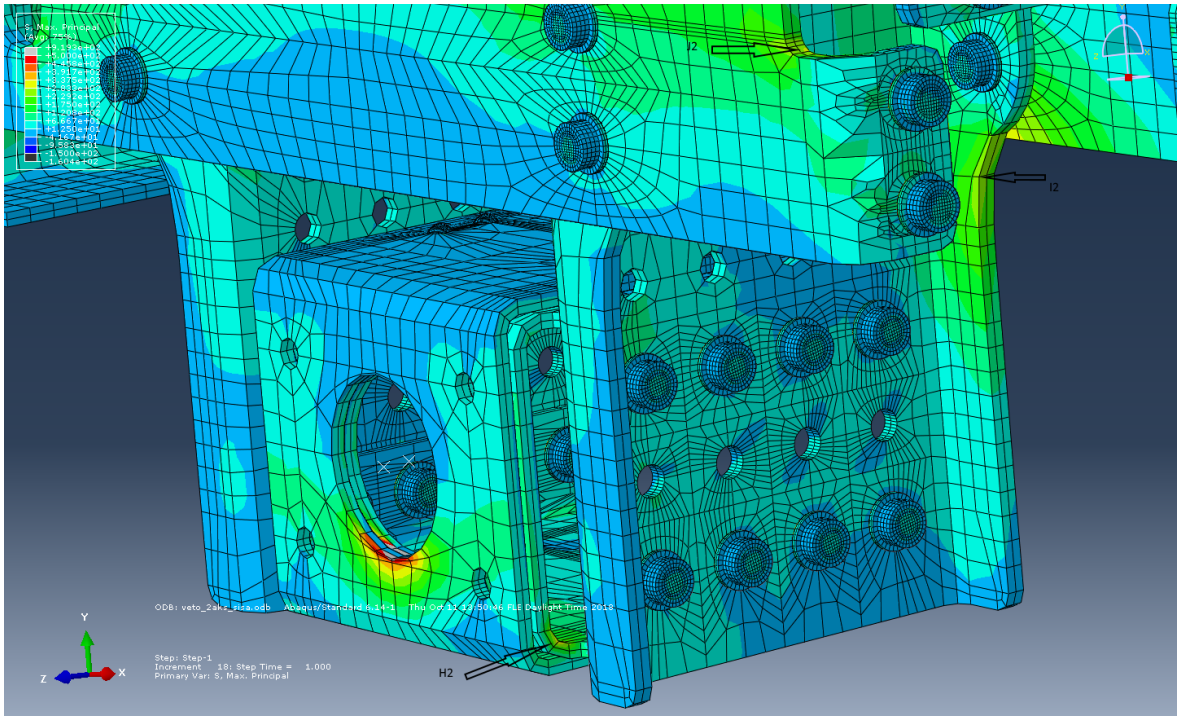

Figure 32. The inner draw beam FEA measurement point locations and abbreviations with 2-axial pulling load.

Table 7. Max principal stresses and displacements at checking points with 2-axial test loads.

	Max. Principal Stress [MPa]	Displacement X-direction [mm]	Displacement Y-direction [mm]	Displacement Z-direction [mm]
H1	434	-0.007	-4.05	-8.36
I1	379	0.44	-4.01	-4.34
J1	381	-0.28	-2.87	-0.004
H2	344	-0.004	2.88	6.23
I2	257	0.3	-0.43	3.32
J2	302	0.05	1.9	0.16

4.2 Joints

Most of the joints are made with the bolt connection and for the bolt connection equations for calculations are presented in chapter 2.3.2 and calculations are in appendix 1. The rivet connection between the draw beam and the stiffener was calculated with same equation as shear resistance for the bolt connection. The bolt connection under analyses was shear resistance, bearing resistance and slipping resistance. Calculations were made for the both M14 and M16 bolts. Strength class used for the calculations was 10.9. Fatigue calculations for the bolt connection is presented in the next chapter 4.3 with the all other fatigue calculations.

Shear resistance was calculated with formula 11 and it is for the one M14 46 kN and for the one M16 bolt 62.8 kN. Shear resistance for the rivets was obtained to be 15.08 kN per rivet. Bearing resistance was calculated for the edge row bolts and not edge row bolts for the side plate point of view and from the draw beam connection point of view. From the side draw beam point of view bearing resistance were determined for M16 bolts because all of the side plates are connected to the draw beam only with M16 bolts. The connection between the side plates and the truck frame beam was determined for smallest connection which is 50x50 mm bolt pattern with M14 bolts. Bearing resistances were calculated with the equation 12. Determinations for the k_1 and α_b are presented in the appendix 1. Bearing resistance for the edge row M16 bolt in the load direction between the draw beam and the side plate was 151 kN and for the other than edge for was 186 kN. Bearing resistance for the edge row bolt in the load direction between the side plate and the truck frame beam was same 151 kN and for not edge row bolt was 168 kN.

As you can see from the results shear resistance is more critical than bearing resistance so the bolt connection capacity is calculated with the shear resistance. There is 7 bolts between the draw beam and the side plate so the bolt connection capacity was 440 kN and 9 bolts between the side plate and the truck frame beam so the bolt connection capacity was 414 kN.

FEA shows that the M14 bolts in the connection between side plate and truck frame beam has about average 450 MPa max principal stresses to the bolt. This bolt was located to the 742 mm draw beam and was first bolt at the second row. It is also presented in figure 33. In the figure 29 you can also see red areas that have about 1000 MPa and they are because of the sharp edge at the model. The inner draw beam bolts have max principal stresses average about 300 MPa at the bolts in the connection between cross-beam and the truck frame beam. This is presented in figure 34.

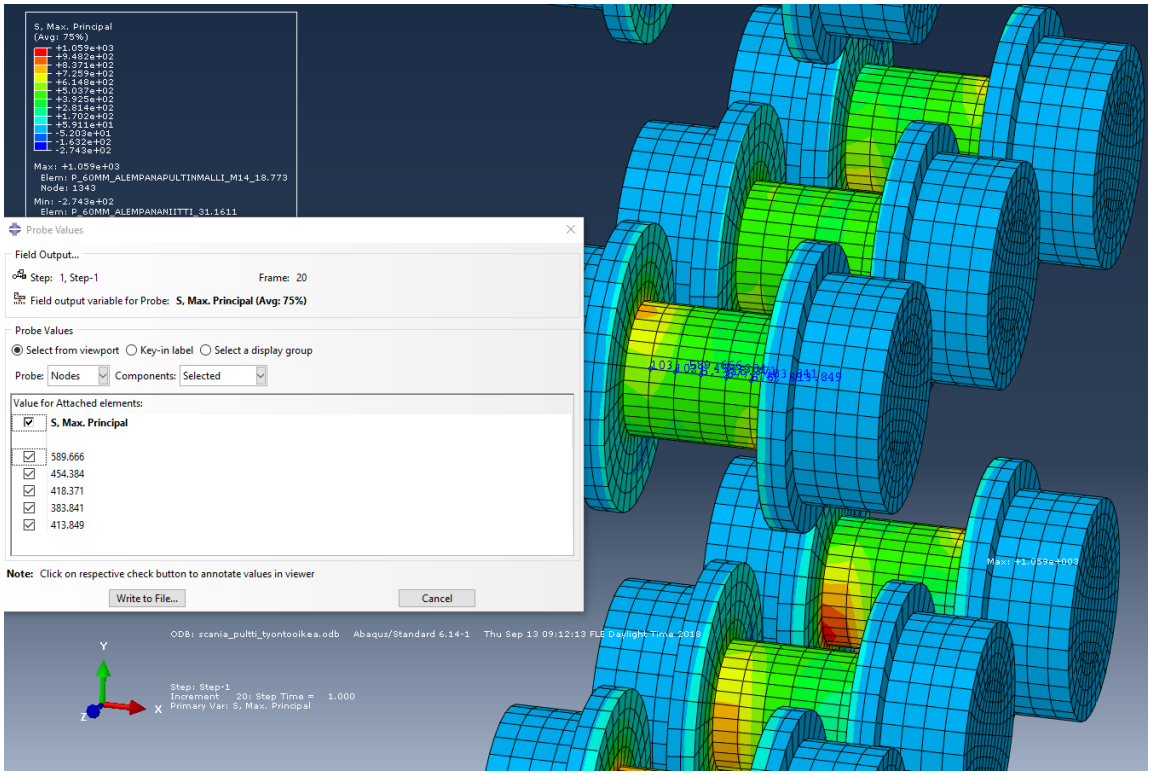

Figure 33. Max principal stresses in the M14 bolts at the connection between the side plate and the truck frame beam.

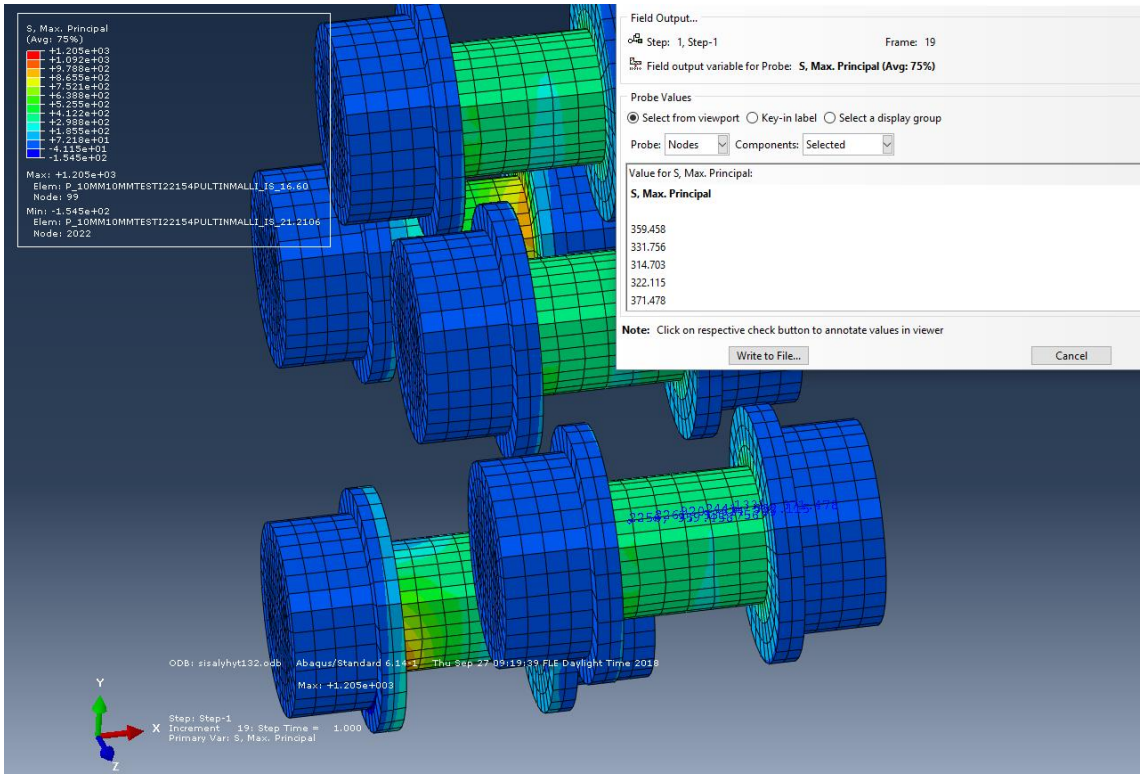

Figure 34. Max principal stresses in the M16 bolts at the connection between cross-beam and truck frame beam.

4.3 Residual stresses

Residual stresses were measured with X-ray diffraction from the outer draw beam assembly and from same places as FEA result points. Results of the measurements are presented in table 8 and table 9. Measurement points are presented in figures 35 and 36.

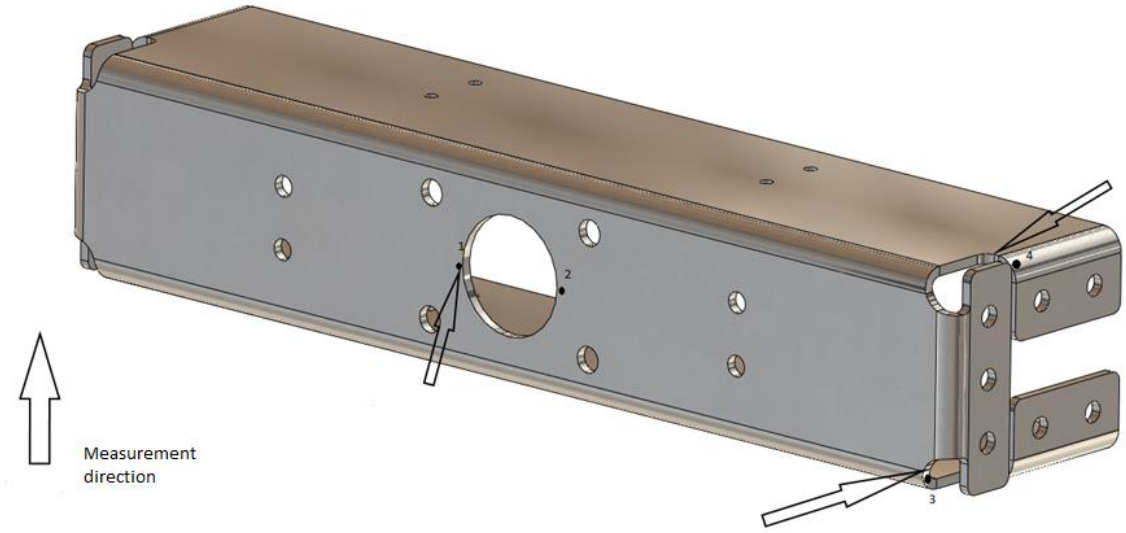

Figure 35. Measurement points for residual stresses at the draw beam.

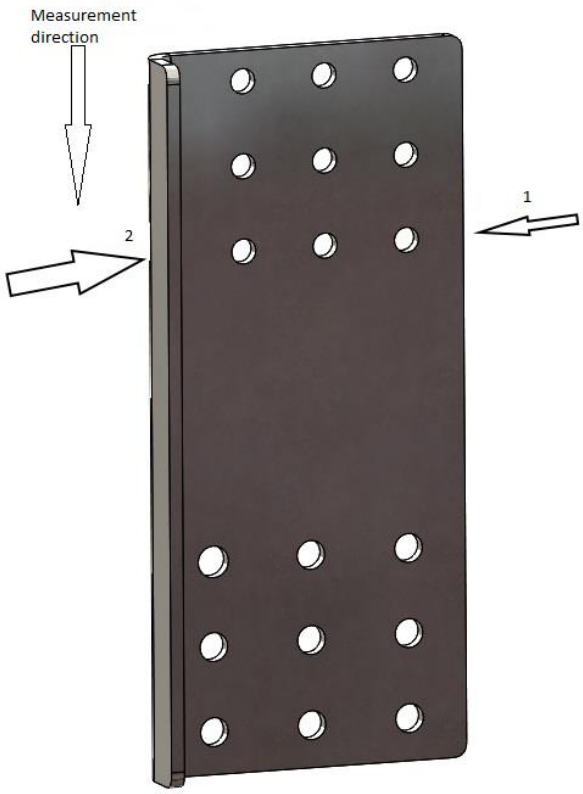

Figure 36. Measurement points for residual stresses at the side plate.

Table 8. Residual stresses from the outer draw beam.

Point	MPa	(+/-)
1	225	13.5
2	230	24.7
3	582	27.4
4	-29	25.3

Table 9. Residual stresses from the side plates

Side plate 1		
Point	MPa	(+/-)
1	130	16.9
2	105	10.5
Side plate 2		
Point	MPa	(+/-)
1	137	17
2	96	8.8

4.4 Fatigue analysis

Fatigue calculations were conducted to the bolt connection with same the test force 132 kN as the actual dynamic fatigue test. Fatigue calculations are presented in appendix 2. The bolt connection and one bolt fatigue capacity was calculated with the formula 16. FAT class for this type of the bolt connection is 90 MPa and for the bolt is 100 MPa and these are presented in the SFS standard (SFS-EN 1993-1-9 2005, p. 20.). Safety factor γ_{Mf} was set to be 1.35 because of the critically consequences if the failure happens. This value was determined by the figure 8. The bolt connection fatigue life time was determined to be $4.57*10^6$ cycles and $1.113*10^7$ cycles for the one M16 bolt and $2.247*10^6$ cycles for M16 bolt.

4.4.1 4R-method

4R-method was used to determinate lifetime of cut edges. Four “R’s” were material strength (R_m) which is 750 MPa which was lowest value what SSAB was given for the material. Residual stress (σ_{res}) was measured with X-ray diffraction. Applied stress ratio (R) was -1 due to loading which is ±132kN in 1-axial loading case. Desirable fatigue life was known to be 2 million cycles without failure so allowable stress range were calculated with 4R-method. Stress range then could be compared with FEA results. After all the components in different measurement points were determined lifetime was calculated with equation 9.

Stress range at different residual stress measurement points are presented in tables 10 and 11.

Table 10. Stress range calculated with 4R method at the draw beam residual stress measurement points.

Stress range with ±132 kN test force [MPa]			
Point	Mean residual stress	Max. residual stress	Min. residual stress
1	422	418	427
2	421	413	429
3	364	361	366
4	626	586	676

Table 11. Stress range calculated with 4R method at the side plate residual stress measurement points.

Stress range with ±132 kN test force [MPa]			
Side plate 1			
Point	Mean residual stress	Max. residual stress	Min. residual stress
1	463	454	473
2	478	471	486
Side plate 2			
Point	Mean residual stress	Max. residual stress	Min. residual stress
1	459	450	469
2	484	478	493

5 EXPERIMENTAL TESTS OF DRAW BEAM

The draw beam were tested under both static and dynamic loading. For the type approval the draw beam needs to endure at least 2 million cycles in fatigue test. Tests were executed in Laboratory of Steel Structures at LUT.

Fatigue tests were executed for the hinged drawbar connection and stiff drawbar connection. The hinged drawbar connection test force is 1 axial and it is directed with servohydraulic cylinder to draw beam so it would similar to real coupling head connection. The stiff drawbar connection is 2 axial and it is executed with 2 servohydraulic cylinders. Horizonal cylinder is located to 190 mm from the draw beam and vertical cylinder is direct to draw beam.

Test equipment needs besides of force cylinders and test specimens, adapters to cylinders, support attachments to t-groove tables and beams to describe the truck frame beams. The frame beam is connected to t-groove tables with 30 mm thick welded plate connection. In 1-axial tests adapters between the force cylinder and the draw beam is connected with pivot pin connection. The principle image of the test equipment is presented in figure 35.

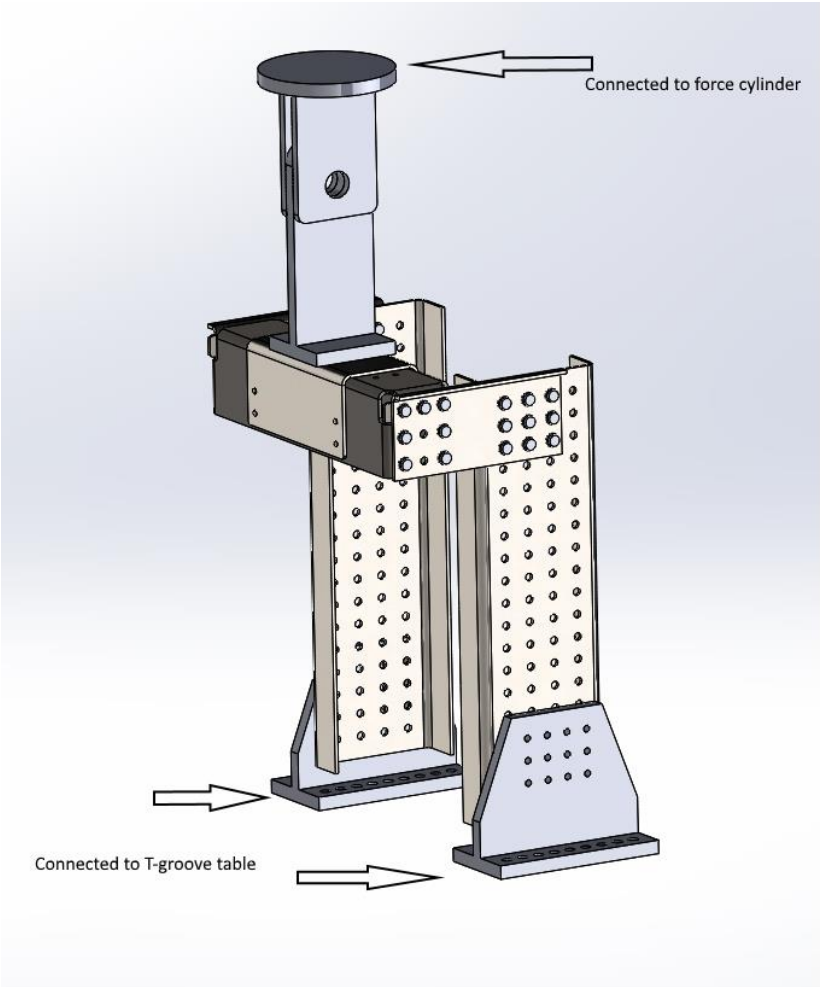

Figure 37. The principle image of test equipment.

Outer draw beam for the hinged drawbar connection tests were made with *D* value of 220 kN and for the stiff drawbar connection with D_c value of 150 kN, *V* value of 50 kN and *S* value of 1000 kg. Fatigue test force (F_{hw}) for the hinged drawbar connection was calculated with formula 4 to be ±132 kN. Test forces for the stiff drawbar connection were calculated with formulas 5, 6 and 7. Horizontal test force (F_{hf}) was calculated with formula 5 to be ±90 kN and vertical force (F_v) was calculated with formulas 6, 7 and 8 to be 9.81±30 kN.

Because of the time reasons results of the experimental tests were excluded from this study.

6 DISCUSSION AND CONCLUSIONS

Smallest new outer draw beam with stiffener weights about 9 kg less than the older one. This means that changing material strength of the material provided 19.5 % mass reduction. Longest new draw beam weights 8 kg less than longest older model and is still 15 mm longer than the older one which provided 15.4 % mass reduction.

4R method was only calculated for the outer draw beam assembly and FEA was made for both outer and inner draw beam assembly. FEA results with 4R method fatigue calculations shows that the outer draw beam should withstand required 2 million cycles in the 1-axial and 2-axial experimental tests. From the 4R calculations of the outer draw beam and FEA results from the inner draw beam can be assumed that the inner draw beam assembly will also withstand required 2 million cycles in experimental tests.

Research problem was to design the draw beam without welds and with higher strength capabilities. As results shows that research was solved with using cold forming to manufacture the draw beam and higher strength material which allowed also notable weight reduction.

Manufactured outer draw beam with stiffener ready for the type approval test is presented in figure 38. In figure 39 is presented end bends and the bolt connection holes for the side plates.

Figure 38. Manufactured outer draw beam with stiffener.

Figure 39. Outer draw beam end bends.

6.1 Further development

Further development depends how total masses of truck combinations increases. If total mass increases twice more than the mass increase included in this draw beam there might be a chance that this version won't be suitable for the job anymore. This scenario is the main further development scenario. Other development targets could be strength calculations to allow connect other heavy products with same bolts as the draw beam and side plates. Laser cut edges from the critical points could be further designed so it will reduce potential fatigue cracks. Other edge from the side plates could be also cold formed to get more stiffness and strength.

REFERENCES

11.12.2002/1090. Ajoneuvolaki. [Referenced 7.5.2018]. Available: https://www.finlex.fi/fi/laki/ajantasa/2002/20021090#L2P10

Ahola, A. 2018. 4R-method presentation. Lecture material Steel Structures II. [Referenced 1.2.2019].

Ahola, A. Nykänen, T & Björk, T. 2017. Effect of loading type on the fatigue strength of asymmetric and symmetric transverse non-load carrying attachments. Fatigue & Fracture of Engineering Materials & Structures. 2016. Pp. 670-682.

Aulomaa, Pertti. 2018. Vetopalkki di-työ [private e-mail]. Receiver: Teemu Hujanen. Sent 11.07.2018, 17.17 o'clock (GMT +0200).

Draw beam. 2018 [www- product document] M. Korte Oy, 2018. Draw beam [Referenced 24.5.2018] Available: https://tav.fi/vetopalkit/

Logistiikan maailma. 2018a. [Referenced 7.5.2018]. Available: http://www.logistiikanmaailma.fi/en/choosing-mode-of-transport/road-transport/

Logistiikan maailma. 2018b. [Referenced 7.5.2018]. Available: http://www.logistiikanmaailma.fi/en/choosing-mode-of-transport/road-transport/dimensions-and-weights/

M. Korte Oy. 2018. TAV Vetolaitteet. Ylöjärvi. 40 p.

Nykänen, T. & Björk, T. 2015. A new proposal for assessment of the fatigue strength of steel butt-welded joints improved by peening (HFMI) under constant amplitude tensile loading. Fatigue & Fracture of Engineering Materials & Structures. 2016. Pp. 566-582.

Scania CV AB. 2003. General bodywork recommendations 2. [web document] [Referenced 18.9.2018]. Available as PDF-file: https://til.scania.com/groups/bwd/documents/bwm/mdaw/mjq3/~edisp/bwm_0000009_01.pdf

SFS-EN 1993-1-8. 2005. Eurocode 3. Teräsrakenteiden suunnittelu. Osa 1-8: Liitosten mitoitus. 148 p.

SFS-EN 1993-1-9. 2005. Eurocode 3. Teräsrakenteiden suunnittelu. Osa 1-9: Väsyminen. 41 p.

SSAB. 2015. STRENX, HARDOX AND DOCOL – Bending of High Strength Steel. Oxelösund. 8 p.

Strenx 700 MC Plus. 2018. [www product document] SSAB, 2018. [Referenced 6.7.2018] Available: https://www.ssab.com/products/brands/strenx/products/strenx-700-mc-plus

Tapaninen, U. 2018. Logistiikka ja liikennejärjestelmät. Helsinki: Otatieto. 172 p.

UN E/ECE/TRANS/505/Rev.1/Add.54/Rev.2. Addendum 54: Regulation No. 55. 2015. Agreement Concerning the Adoption of Uniform Technical Prescriptions for Wheeled Vehicles and the Conditions for Reciprocal Recognition of Approvals Granted on the Basis of these Prescriptions.

VNa 407/2013. Valtioneuvoston asetus ajoneuvojen käytöstä tiellä annetun asetuksen muuttamisesta.

Volvo Trucks North America. 2017. Body Builder Instructions. [Referenced 16.5.2018]. Available: https://www.volvotrucks.us/-/media/vtna/files/shared/body-builder/manuals/volvo_section-7-frame.pdf

Bolt connection calculations

One bolt shear resistance

$a_v := 0.5$ $f_{ub} := 1000MPa$ $A_1 := (8mm)^2 \cdot \pi = 2.011 \times 10^{-4} m^2$ $\gamma_{M2} := 1.25$ $d_{m16} := 16mm$

$A_{m16} := 157mm^2$ $A_{m14} := 115mm^2$ $d_{m14} := 14mm$

$$F_{vrdm16} := \frac{a_v \cdot f_{ub} \cdot A_{m16}}{\gamma_{M2}} = 62.8 \cdot kN$$

$$F_{vrdm14} := \frac{a_v \cdot f_{ub} \cdot A_{m14}}{\gamma_{M2}} = 46 \cdot kN$$

System bolt shear resistance

$F_{vrdfullm16} := 32 \cdot F_{vrdm16} = 2.01 \times 10^3 \cdot kN$ $F_{vrdfullm14} := 32 \cdot F_{vrdm14} = 1.472 \times 10^3 \cdot kN$

Half system shear resistance

$F_{vrdhalfm16} := 16 \cdot F_{vrdm16} = 1.005 \times 10^3 \cdot kN$ $F_{vrdhalfm14} := 16 \cdot F_{vrdm14} = 736 \cdot kN$

Bearing resistance

Bolt connection between the draw beam and the side plates

$f_u := 750MPa$ $t_1 := 8mm$ $e_1 := 39mm$ $p_1 := 50mm$

αb is lowest of following

$$\frac{f_{ub}}{f_u} = 1.333 \quad \text{or } 1$$

or edge row at the direction of the load

$$\frac{e_1}{3 \cdot d_{m16}} = 0.813 \qquad \alpha_{bedge} := 0.813$$

other bolts

$$\frac{p_1}{3 \cdot d_{m16}} = 1.042 \qquad \alpha_{bnotedge} := 1$$

k.1 is lowest of following

if not edge row screw $p_2 := 50mm$ $d_{0m16} := 17mm$

$$k_{1nem16} := 1.4 \cdot \frac{p_2}{d_{0m16}} - 1.7 = 2.418 \quad \text{or } 2.5$$

$$F_{brdnotedgem16} := \frac{k_{1nem16} \cdot \alpha_{bnotedge} \cdot f_u \cdot t_1 \cdot d_{m16}}{\gamma_{M2}} = 185.675 \cdot kN$$

edge row screws $e_2 := 25mm$

$$k_{1e} := 2.8 \cdot \frac{e_2}{d_{0m16}} - 1.7 = 2.418$$ or 2.5

$k_1 := 2.418$

$$F_{brdedgem16} := \frac{k_1 \cdot \alpha_{bedge} \cdot f_u \cdot t_1 \cdot d_{m16}}{\gamma_{M2}} = 150.976 \cdot kN$$

The bolt connection between the side plate and the smallest truck frame

αb is lowest of following

$$\frac{f_{ub}}{f_u} = 1.333$$ or 1

or edge row at the direction of the load

$$\frac{e_1}{3 \cdot d_{m14}} = 0.929 \qquad \alpha_{bedgem14} := 0.929$$

other bolts

$$\frac{p_1}{3 \cdot d_{m14}} = 1.19 \qquad \alpha_{bnotedgem14} := 1$$

k.1 is lowest of following

if not edge row screw $p_2 := 50mm$ $d_{0m14} := 14.8mm$

$$1.4 \cdot \frac{p_2}{d_{0m14}} - 1.7 = 3.03$$ or 2.5 $k_{1nem14} := 2.5$

$$F_{brdnotedgem14} := \frac{k_{1nem14} \cdot \alpha_{bnotedgem14} \cdot f_u \cdot t_1 \cdot d_{m14}}{\gamma_{M2}} = 168 \cdot kN$$

edge row screws

$$2.8 \cdot \frac{e_2}{d_{0m16}} - 1.7 = 2.418$$ or 2.5 $k_{1edge} := 2.418$

$$F_{brdnedgem14} := \frac{k_{1edge} \cdot \alpha_{bedgem14} \cdot f_u \cdot t_1 \cdot d_{m14}}{\gamma_{M2}} = 150.953 \cdot kN$$

Slipping resistance for one bolt

$k_s := 1 \quad n_1 := 1 \quad \mu_1 := 0.4 \quad \gamma_{m3ser} := 1.1$

$F_{pC} := 0.7 \cdot f_{ub} \cdot A_{m16} = 109.9 \cdot kN \qquad F_{pC2} := 62.5kN$

$$F_{sRd} := \frac{k_s \cdot n_1 \cdot \mu_1}{\gamma_{m3ser}} \cdot F_{pC2} = 22.727 \cdot kN$$

Slipping resistance for whole bolt connection system

$F_{sRdfull} := 32 \cdot F_{sRd} = 727.273 \cdot kN$

Rivet shear resistance

$f_{ur} := 400MPa \qquad A_r := \pi \cdot (5mm)^2 = 7.854 \times 10^{-5} m^2$

$$F_{vRdR} := \frac{0.6 \cdot f_{ur} \cdot A_r}{\gamma_{M2}} = 15.08 \cdot kN$$

Rivet tension resistance

$$F_{tRdR} := \frac{0.6 \cdot f_{ur} \cdot A_r}{\gamma_{M2}} = 15.08 \cdot kN$$

Bolt connection fatigue strength

$FAT_{bc} := 90MPa \quad m_{bc} := 3 \quad \gamma_{Mf} := 1.35 \quad F_{bc} := 440 \cdot 0.6kN$

$A_{bc} := 163mm \cdot 16mm \cdot 2 = 5.216 \times 10^{-3} m^2$

$$\Delta\sigma_{bc} := \frac{F_{bc}}{A_{bc}} = 50.613 \cdot MPa$$

$$N_{fbc} := \left(\frac{FAT_{bc}}{\gamma_{Mf} \cdot \Delta\sigma_{bc}}\right)^{m_{bc}} \cdot 2 \cdot 10^6 = 4.57 \times 10^6$$

One bolt fatigue strength

$FAT_b := 100MPa$

$$\Delta\sigma_b := \frac{\frac{F_{bc}}{157mm^2}}{32} = 52.548 \cdot MPa \qquad m_b := 5$$

$$N_{fb} := \left(\frac{FAT_b}{\gamma_{Mf} \cdot \Delta\sigma_b}\right)^{m_b} \cdot 2 \cdot 10^6 = 1.113 \times 10^7$$