LUT UNIVERSITY
LUT School of Energy Systems
LUT Mechanical Engineering

Vedant Sharma

STUDY AND RESEARCH ON WOOD-BASED MATERIALS IN 3D PRINTING OF PACKAGING PARTS

Examiner(s): Professor Heikki Handroos
D. Sc. (Tech.) Hamid Roozbahani

ABSTRACT

LUT University
LUT School of Energy Systems
LUT Mechanical Engineering

Vedant Sharma

Study and research on wood-based materials in 3D printing of packaging parts

Master's thesis

2019

60 pages, 21 figures, 2 table

Examiners: Professor Heikki Handroos
D. Sc. (Tech.) Hamid Roozbahani

Keywords: 3D Printing, Wood printing, Packaging parts

The aim of this thesis is to do a detailed study of wooden based materials and their derivatives in relevance to 3D printing and suggest the suitable materials for 3D printing packaging parts.

The various 3D printing methods for wood and its derivative's materials and their combination with other materials are discussed. Finally, based on the studies and analysis conducted a prototype model of nozzle is suggested for new 3D printing technique

ACKNOWLEDGEMENTS

This thesis was carried out in New Area Project as the part of TEKES funded project in LUT University, under LUT Mechanical Engineering department the duration of thesis was 28.08-2018 – 27.05.2019. This project would have not able to complete without the support and guidance of my supervisor Mr. Hamid Roozbahani. I would also like to thank all the professors and lecturers from who I was able to learn a lot during my studies here at LUT University.

I will also like to express my deepest gratitude to Mr. Hamid Roozbahani for providing me with financial support and also, specially to Mr. Pavel Kovalenko and Ms. Svetlana Perepelkina from ITMO University Saint Petersburg, Russia for providing me this great opportunity to learn from them and for guidance they have provided me during this period.

Finally, I would like to thank my family and friends who encouraged me throughout this whole journey and trusted me.

Vedant Sharma

Vedant Sharma

Lappeenranta 27.5.2019

TABLE OF CONTENTS

LIST OF SYMBOLS AND ABBREVIATIONS

CNC	Cellulose nanocrystals
CNF	Cellulose nanofibrils
FDM	Fused deposition modeling
MCC	Microcrystalline Cellulose

1 INTRODUCTION

3D printing also called additive manufacturing is responsible for inducing changes across numerous sectors including energy, construction, medical devices, biotechnology, architecture, and packaging. It was during the 1980s when 3D printing had been introduced by Charles W. Hulls (Correa et al., 2015). The first ever, technology was introduced in 1986 and termed stereolithography. 3D printing is an effective technology, which can efficiently provide a digital design of the product and with high accuracy and precision rate, can produce it. Recently, it is gaining immense popularity because of its ability to offer prototypes, customer-oriented designs, high degree of accuracy for very complex structures and efficient and fast personalized requested fabrications for small scale production in economical cost (Niaki, Torabi and Nonino 2019, Prakash et al. 2019, Wimmer et al. 2015). Consequently, it has been identified as a technological revolution and innovation. As indicated in literature, 3D printing methods can be classified into 4 major classes:

1. Extrusion based techniques
2. Particle fusion techniques
3. Stereolithography
4. Inkjet printing

The additive manufacturing technologies are capable to print on the same material, but the formulations of ink or in more precise terms, the printable material varies drastically (Wimmer et al. 2015). 3D inks exhibit a controllable viscoelastic response so as to reduce the resistance “to extrusion through the nozzles” (Prakash et al. 2019). It is essential for them to create networks that offer stability and can withstand the compressive stresses that come from the capillary forces. Furthermore, they should have the ability to restrict shrinkage because of drying to ensure that the object formation is a nether deformed nor cracked (Niaki, Torabi and Nonino 2019). The synthesis of literature suggests that 3D inks that are the most commonly used are of ceramics, metals, and thermoplastics.

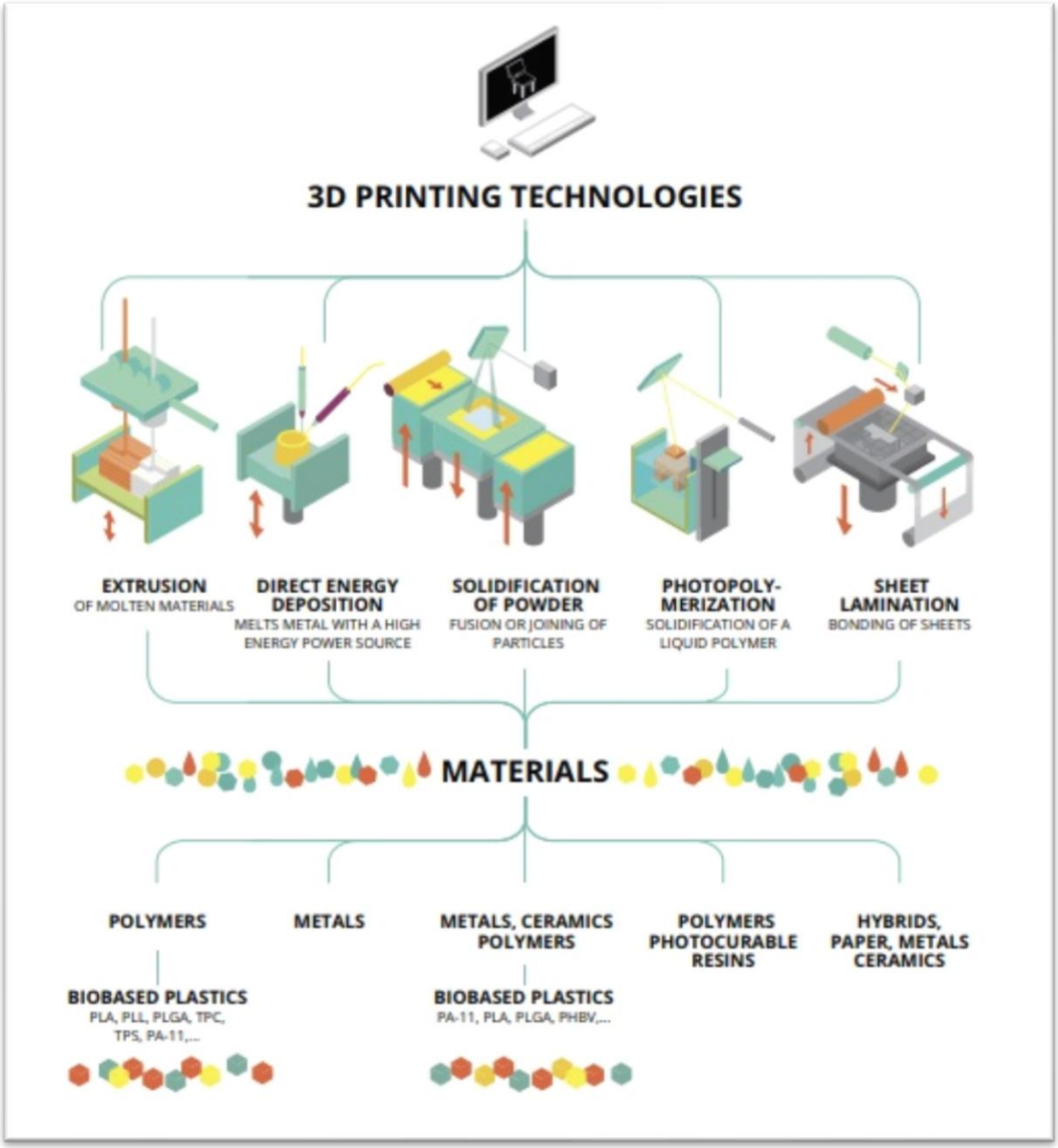

Figure 1. Schematic Diagram of additive manufacturing Techniques and Materials (Van Wijk and Van Wijk 2015).

1.1 Research Significance

Recently, wood and cellulose based materials have gained attention because of sustainability and environmental issues (Muth et al. 2014). Consequently, researchers, academics, and industry professionals are emphasizing on the adoption of wooden and cellulose based materials in 3D printing. Derived from plants and trees, wood and cellulose are considered

to be more sustainable and inexhaustible as compared to polymers (McAlister and Wood 2014). They have the ability to increase eco-friendly products.

Wood and cellulose based derivatives are available abundantly. They are known for their interesting complex structure and properties. As indicated by Liu Et al. (2016), the annual growth of cellulose based biomass has been estimated to be 1.5 trillion tons. Thus, the growth of bio-based, wood and cellulose materials is increasing as they are eco-friendly materials. Cellulose and wood-based materials are known to be renewable materials and are responsible for the adoption of preventing the greenhouse emissions, climate change and adoption of sustainability (Li et al. 2016). Renewable products are in constant demand as they are lower in cost and energy efficient. The increasing demand of wood and cellulose based products in 3D printing is also increasing as they are efficient for capital and resources (Le Duigou et al. 2016). Significant researches are being done various wooden cellulose and their derivatives. These include cellulose esters, Nano-cellulose derivatives, etc.

Long, cellulose esters and micro-cellulose have been in the market for commercial purposes. For printing purposes, cellulose based papers have been available ultimately period. As indicated in literature, wood, and cellulose based, products have exhibited efficiency for printing inks in additive manufacturing (Carreño et al., 2017, Feng et al. 2018, Håkansson et al. 2016, Le Duigou et al. 2016, Li et al. 2017, Li et al. 2018, Murphy & Collins 2018, Nechyporchuk, Belgacem & Bras, 2016,Osong, Norgren & Engstrand, 2016). The goal of this research is to provide a review of wood and cellulose based derivative's use in 3D printing, using diverse and academic resources. It also aims at developing a prototype for 3D printing based on wood and cellulose derivatives to highlight its benefits, efficiency, and applicability with a specific reference to the packaging industry.

The synthesis of literature suggests that 3D printing inks are primarily of polymers like polylactic acid, nylon, acrylonitrile and butadiene styrene. These printing materials happen to be hazardous and dangerous to the environment (Osong, Norgren and Engstrand, 2016). Furthermore, these compounds can threaten the health of human beings during the additive manufacturing procedure. To reduce level of toxicity caused by additive manufacturing materials and to adopt sustainability, the packaging industry is inclining towards the use of wood and cellulose based materials (Nechyporchuk, Belgacem and Bras, 2016). In the plant

cell wall, cellulose is the primary component available readily. Cellulose nanocrystalline is formed when structure cellulose chain's group. Cellulose nanocrystalline forms a hierarchal structure when combined with disarranged cellulose, comprised of various components including lignin, hemicelluloses, and pectin (Murphy and Collins 2018). Structural configuration with the interactional bonding between the components of the cell at different levels is accountable for influencing the mechanical characteristics of cell wall. As cellulose along with its derivatives offer better design composite constituents.

The developments in printed electronics and intelligence have been increasing at an alarming rate because of technological development, economic trends and market demand (Li et al. 2018). As plastics, silicon, and ceramic based substrates are not sustainable materials, there is demand for substrates that are eco-friendly, flexible and economical in pricing (Carreño et al., 2017). Although the use of printed electronics will act as a substitute for silicon-based devices, it has opened paths for using economically, priced printed circuits that use ecofriendly materials fulfill the requirements of the different targeted markets. The challenge prevalent in printed electronics and 3D printing is to use the suitable material that acts as a substrate to meet the demands of the printing (Li et al. 2018). With subsequent rise in internet of things (IoT), the physical devices, homes, automobiles, work settings, etc. are connected to the internet technology that allows the sharing and collection of data (Wimmer et al. 2015). As IoT is responsible for connecting different electronic devices, it has a much improved logistics system, which offers potential economic advantages. The use of sensors helps in reducing food waste as low cost devices are used (Correa et al., 2015, Prakash et al. 2019). So, printing across various sectors including packaging, construction, biomedical, telecommunications, manufacturing, is adopting additive or 3D printing to reduce operational costs and enhance operational efficiency (Niaki, Torabi and Nonino 2019).

As indicated in literature, the use of devices such as supercapacitors is being adopted to sustain energy (Muth et al. 2014). They are efficient devices that store electrochemical energy. Their benefits include efficient power capacity, lower weight and longer life cycle. Current researches are adopting flexible, economical and sustainable solutions. According to Muth (2014), the use of substrates that are based on wood and cellulose offers economically, viable solutions as compared to the use of silicon in the application electronic

devices. The basic advantages include easy integration, flexible usage, reduction in toxic materials and high production capability.

SECTOR	PRESENT APPLICATIONS	FUTURE APPLICATIONS
INDUSTRY	Product components, spare parts, reproduction of parts	Complete and complex products, washing machines, mobile phones, guns, drones
HEALTH	Dental bridges and crowns, prostheses	Living tissues and organs, bionic ears, eyes
FASHION	Jewelry, special designed clothes	Clothes, shoes, accessories - personalized for your posture and taste
FOOD	Nice looking deserts, appetizers	Producing food (hamburgers, potatoes) personalized to your diet, calories and taste.
BUILDING	No applications yet	Building parts and complete buildings with a high degree of freedom of design and future changes
AT HOME	Special designed gadgets, simple products	Order products and print at home, repair products, design and produce personalized products
OTHERS	Building in space	Chemistry: building molecules Pharmacy: building personalized medicine

Figure 2. Applications of additive manufacturing in different Industries (Van Wijk & Van Wijk 2015).

According McAlister and Wood (2014), additive manufacturing is been utilized in several industries as shown in **Figure 3.** This event includes manufacturing, jewelry making, packaging, airlines, manufacturing, music, food, and construction. Their application are

- Prototyping at a rapid rate to design the product and evaluate it before it is produced.
- Creation of molds and related templates to aid massive scale production. It is primarily used in biomedical engineering, architecture, manufacturing, and pharmaceuticals to produce large scale models or prototypes.

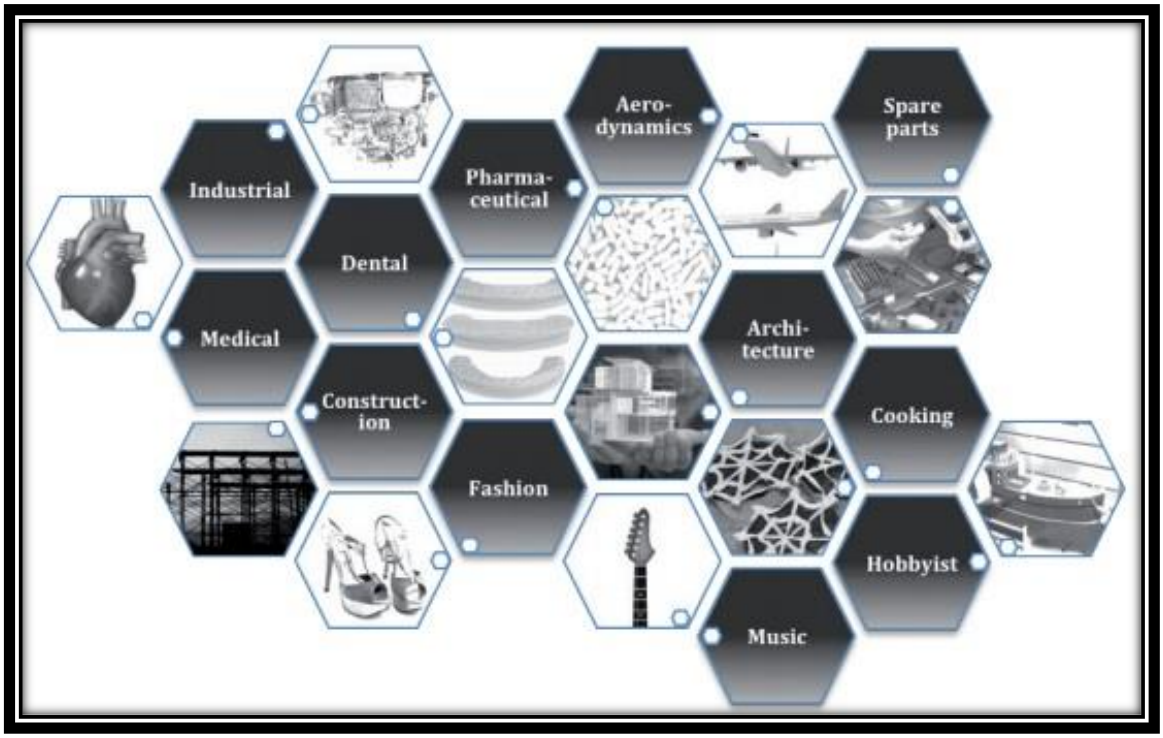

Figure 3. Overview Applications of additive manufacturing in different Industries (McAlister & Wood 2014).

3D printing technologies for wood and cellulose can offer innovative and superior methods for designing, manufacturing, and printing. Wood and cellulose based, materials are available as bleached pulp as well as lingo cellulose. Research on cellulose nanofibrils (CNF), Nano-cellulose/micro cellulose (MCC), bacterial cellulose (BC), cellulose nanocrystalline (CNC) have been conducted over the years (Carreño et al., 2017, Dai et al. 2018, Wang et al., 2018, Henke & Treml 2013, Jia et al. 2017, Kariz, Sernek & Kuzman 2016, Kariz et al. 2018, Kuzmenko et al. 2018, Le Duigou et al. 2016, Li et al. 2017, Li et al. 2018, Murphy & Collins 2018, Nechyporchuk, Belgacem & Bras, 2016, Osong, Norgren and Engstrand, 2016). The synthesis of literature also suggests that wood and cellulose materials that have not been subjected to chemical modifications are considered to be infeasible as they are thermally unstable and are subjected to decomposition before they can be melted (Carreño et al., 2017, Compton & Lewis, 2014, Dai et al., 2018). When heat is applied, they become flowable. The literature analysis suggests that hydrogels in nanocellulose exhibit shearing behavior that can be considered as the 3D printing precursors. The fundamental benefit of using these new materials in additive or 3D printing is because

of their flexibility, usability, and sustainability (Osong, Norgren and Engstrand, 2016). Furthermore, they are available at economical prices.

1.2 Scope and Limitation

This thesis stresses over analyzing by reviewing wooden based and its derivatives in additive manufacturing. The nature of research is based focuses on discussing and reviewing the literature pertaining to the wooden based materials and its derivatives that are being used in 3D printing using different techniques. Woods and cellulose along with its derivatives are natural, sustainable and natural products, which improve the outcomes for 3D printing. This thesis focuses also focuses on suggesting new printing method design prototype for printing packaging parts.

Research Outline:

The research outline for the dissertation is discussed:

- Provides an overall insight on research topic, research objectives and its consequence.
- Provides a detailed and comprehensive literature review on additive manufacturing techniques based on wooden materials and its derivatives.
- Discusses the research methods adopted in research
- Presents the findings and the analysis.
- Provides overall research conclusion.

2 LITERATURE REVIEW

2.1 3D Printing Wooden Based Material / Cellulose

2.1.1 Wood

Trees is responsible for giving us materials, which under the category of renewable and energy efficient materials that grow and are found abundantly globally. Using water, soil, and air as their source of growth, they have several purposes (Carreño et al., 2017). Wood coming from trees recently has been mixed with different materials to create a composite material or polymer-based material. Wood and wood-based materials can be processed through a series of methods and applications, which are wide ranging. As indicated in literature, wooden is responsible for effecting the daily lives of human beings in different ways (Nechyporchuk, Belgacem and Bras, 2016). Wood based, products are used in construction sector, in furniture, packaging of food items and medical supplies. Using wooding is important to improve sustainability unique way. The wooden tissue has a complicated structure as illustrated in **Figure 4**.

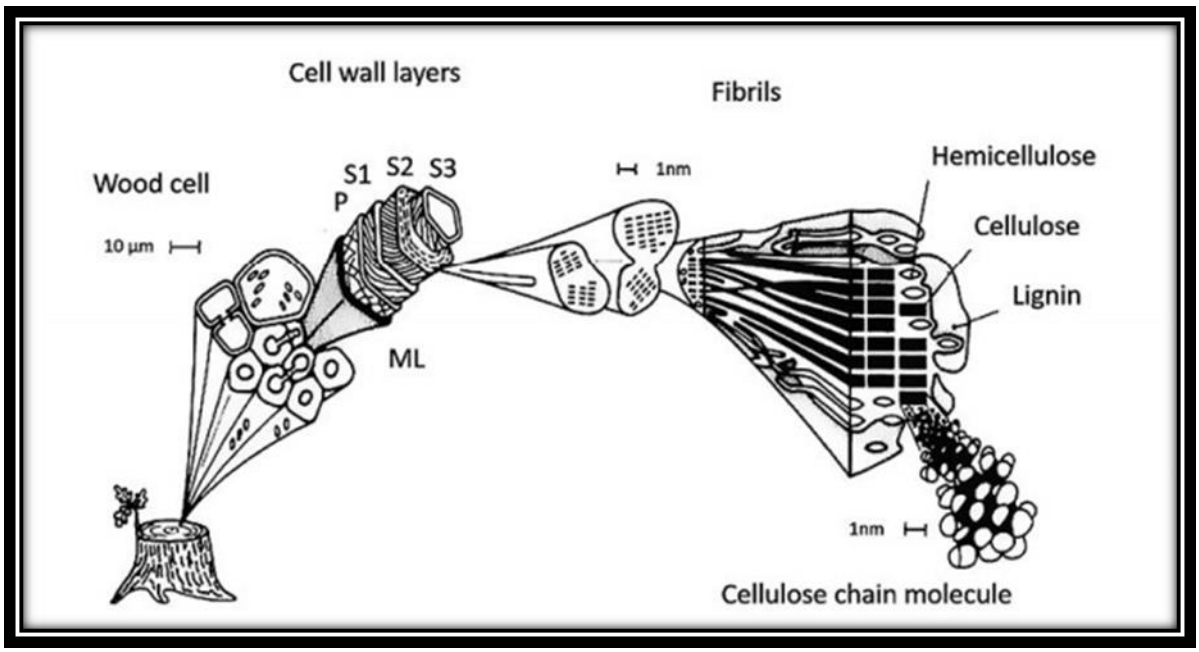

Figure 4. Wood Tissue Cell (Xu, 2019)

In morphological terms, the wood tissues contain cell walls that had varying cell wall layers. These cell wall layers are enclosed by “amorphous and intracellular substances," which is responsible for increasing the strength of the trees and enhancing their physical properties

(Xu, 2019). The cell wall found in the wood tissue is categorized into three walls: primary wall (P), middle lamella (ML) and secondary walls (S). The primary cell wall contains tiny micro fibers called microfibrils, which have a varying diameter, ranging from 10 to 40 μm. They have a length expressed in mm and are arranged in a random fashion. They are also packed loosely. The secondary walls consist of 3 layers: outer, middle and inner layer. These walls also contain microfibrils. They are dispersed at diverging angles. Both microfibrils of primary and secondary cell walls have a clustered of fibril bundles with length over 1 μm. Their lateral dimension varies from 10 to 30 nm. The fibril bundles are made from basic fibrils that have about 40 chains of cellulose with varying diameters of 1.5 to 3.5 nm. In the secondary wall cells, the microfibrils, hemicelluloses, and lignin are well integrated to create the tissue of wood.

In chemical representation, wood is composed of cellulose, hemicelluloses, and lignin at constituent percentages of 45 to 50%, 20 to 25% and 20 to 30% respectively (Murphy and Collins 2018). The composition of cellulose is linear. It comprises a D-glucopyranose-unit. These units are connected to the β-1,4. The connection between the two is because of glycosidic bonds. “The sugar unit is with the glucosyl ring in 4C1 chair configuration and one primary and two secondary hydroxyl groups” (Xu 2019). At inter and intra molecular level, the bond network of hydrogen is created between cellulose chains the hydroxyl groups. These bonds are also formed within and therefore, contribute to the crystalline structure.

Whereas, hemicelluloses are known to be polysaccharides, which are heterogeneous in nature (Li et al. 2018). They function for supporting the cell walls are similar to that of the cellulose. After the nature and species of trees, the content, and composition of hemicelluloses varies. Hemicelluloses is found in branches and exhibit a slower degree of polymerization. They are not fully soluble in water (Li et al. 2017). They are partially soluble water-based polymers.

This is because of low sugar units, which range from 100 to 200 sugar units approximately. Woods that are a softer have hemicelluloses that are known as O-acetyl-galactoglucomannans at constituent level of 20 to 25% (Le Duigou et al. 2016). They are also abbreviated as GGM. Arabinoglucurunoxylans at levels of 5-10% are also present in

the hemicelluloses. Other components that are available in the softwoods include xyloglucans.

However, xylans in the form of O-acetyl-4-O-methylglucuronoxylans are primarily available in hardwoods. They are known to be the primary hemicellulose material in hardwoods with a constituent level ranging from 80 to 90% (Compton and Lewis, 2014). Lignin is also a material that is a polymer. It is an amorphous and aromatic polymer. It is the most of material in the biomass of lignocellulose. The lignin consists of the unit of "phenylpropane unit with p-coumaryl alcohol, sinapyl alcohol and coniferyl alcohol" (Xu 2019). According to Kuzmenko et al. (2018), lignin has an important role in influencing cell wall. It is responsible for stiffening the cell walls, bonding the cells together and increasing the abrasion towards biodegradability. Furthermore, extractives are also found in the wood cells. They are identified as different substances, which are responsible for the maintenance of the biological functions of the tree, helping them to ward off the microorganisms.

2.1.2 Cellulose Based Paper

Wood and cellulose fibers offer potential advantages for 3D printing in packaging, construction, architecture, manufacturing and biomedical engineering. Because of their abundance, economic sustainability, flexibility and environmental friendliness, researches have been made on analyzing and understanding their chemical and physical properties in context to 3D printing (Dai et al. 2018). Because of strong, interlocking mechanical properties, hydrogen bonds, electrostatics and Van der Waals forces they exhibit a strong bond which results in the formation of the paper (Dai et al. 2018, Jia et al. 2017, Kariz, Sernek & Kuzman 2016, Kariz et al. 2018). The paper comprises a network of fibers that are light weighted, economically sustainable and environmentally friendly. This material has a structure that is porous. It also acts as an underlying layer of the hierarchal system (Kariz et al. 2018). Cellulose fibers contain a variety of functional groups, which are located on their surface. Thus, they show strong binding properties and can be bounded with other materials. Considered the example of graphene nanosheets (GNS). The hydroxyl groups of the cellulose fibers can be attached to GNS securely to create a network conductive and interwoven (Kariz, Sernek and Kuzman 2016).

This combination utilizes the use of strength and texture of the former with the high electroactivity and electric conductivity of the latter. So, they are ideal to be used for a variety of applications. These include intelligent packaging, bio-sensing devices, storage devices for energy, electronic devices, etc. (Henke and Treml 2013). As a paper layer is highly porous in nature with a large surface area, it can be used with sensors to improve chemical detection through the capturing of the molecules of analyte. It is also hydrophilic. In aqueous state, it can exhibit swelling that increases its sensitivity. With swelling, the concentration of analyte can be increased because of high sensitivity (Hausmann et al. 2018). Cellulose based paper application and summary can be seen in **Figure 5**.

Summary of various products using cellulosic paper as a platform.

Type of product	Function	Advantages
Sensors and microfluidic paper-based analytical devices (μ-PAD)	Substrate/scaffold; channel provider	Low-cost, hierarchical network, high porosity, large surface area, and nanofiber-based bundling flexibility and disposability
Paper-based electronics (supercapacitors, field effect transistors, Lithium ion batteries, etc.)	Substrate; electrolyte reservoir; channel/ pathway provider; dielectric layer; separator membrane	Widespread availability, low cost, flexibility, high-surface-area, porous structure and good electrolyte absorption properties
Organic solar cells	Substrate; light management layer	Low cost, ultrathin and ultra-lightweight features
Titanium carbide nanoparticles	Substrate; carbon precursor	Hierarchical structure and low cost
Surface enhanced Raman spectroscopy (SERS) substrates	Substrate	Low-cost, high porosity and disposability

Figure 5. Summary of Products based on Cellulose Paper (Dai et al. 2018).

As indicated in literature, cellulose based paper has the efficient and effective ability to act as a carrier for chemical compounds, colorimetric tests can be conducted to investigate the color intensity of the compounds that are developed (Dai et al. 2018, Faludi et al. 2015, Feng et al. 2018, Håkansson et al. 2016). Shown in **Figure 5.**, μ-PADs or better known as microfluidic paper based analytical devices are useful in measuring the analytes concentration in aqueous environments. Thus, they are known to be good interfaces for the point of care (POC) analysis (Feng et al. 2018). The μ-PADs is created with the implementation of printing techniques such as wax printing. 3D printing demonstrates excellent fabrication for 3D models.Håkansson et al. (2016) conducted a study witch a 3D printer was used with cellulose powder to design a μ –PADs. Because of the cellulose powder's capillary action, it can move the liquid by this effect. This effect is similar as that of the cellulose paper. Cellulose powder can successfully achieve a capillary speed flow that

is configurable because of the easy accessibility of the microchannels at varying depths. The speed of the flow enjoys a linear relationship with the depth of the channel (Dai et al. 2018). Mariotti et al. (2017) conducted an experiment and studied the 3D printing and its application in fabrication of passive parts of radio-frequency through the use of a cellulose paper. The outcome of the study indicated that the RF based devices demonstrated higher values of inductance and capacitance per unit area as compared to other technological devices. The researchers conclude that the conversion loss of the 3D printer for RF was below the value of 10 dB (Mariotti et al., 2017).

Through cellulose based papers, additive manufacturing technology can be used for designing braille, which is a varying demonstrative pattern. This, Jo et al. Reserched on use of cellulose paper and 3D printing to create a braille (Carreño et al., 2017). Study revealed that cellulose paper exhibited strong wear resistance, which is because of its high adhesion strength at its interface. A thermal reflow treatment had been subjected to improve the high adhesion strength.

This allowed the polylactic acid (PLA) to submerge itself with the cellulose, binding the two materials to create the braille patterns in 3D., This pattern offers a method of improving touch for blind individuals. It is also used for improving the physically recognize patterns.

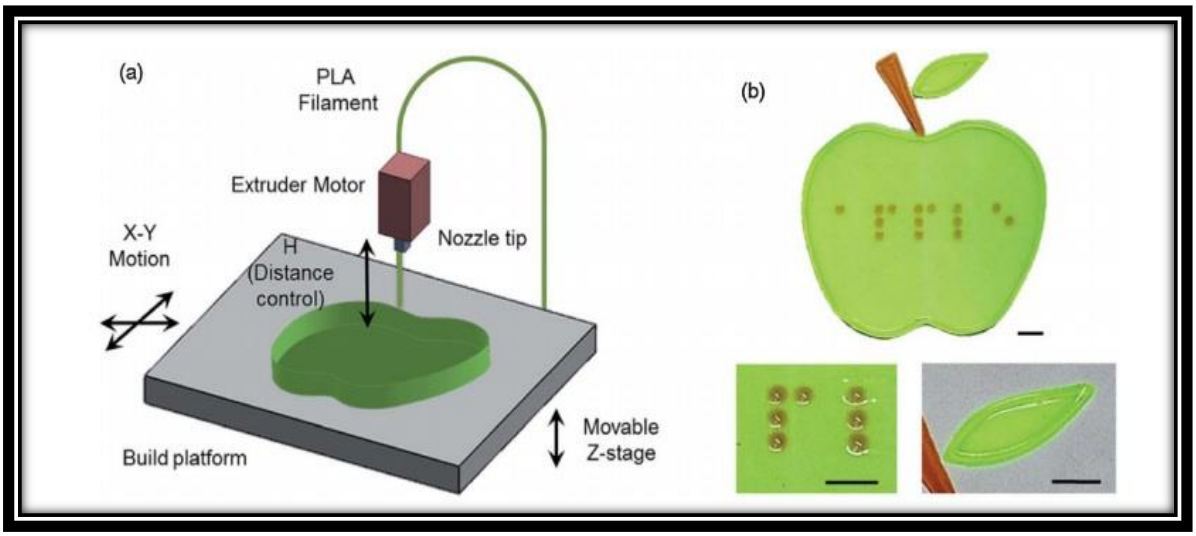

Figure 6. Diagram for 3D Printing of Braille Pattern (Dai et al. 2018).

2.1.3 Solubilized Cellulose

Cellulose and cellulose based derivatives are known to be ideal for 3D printing. Consequently, solvents are considered to be important when cellulose and its derivatives are being used as they don't have the melt-processing properties. It exhibits insolubility property when water and some organic solvents are being used because of the creation of intermolecular and intramolecular hydrogen bonds (Jia et al. 2017). As indicated in literature, a few numbers of solvents are available that has the ability to dissolve it (Jia et al. 2017). Terms, solvents for cellulose have been categorized in two categories, which are: derivatizing solvents and non-derivatizing solvents (Henke and Treml 2013). In the former, the disruption of hydroxyl groups in cellulose is done with solvents such as esterification and etherification and it results in the dissolution of the cellulose (Henke and Treml 2013). The latter allows the dissolution of cellulose through physical intermolecular activity without any previous derivatization. As indicated in literature, the latter derivatization is considered to be preferred. As indicated in literature, this derivatization has disadvantages.

The main problems in cellulose solvents that are aqueous and non-aqueous in nature are that their solvation power rate is inadequate or they are highly toxic. Under higher temperatures and pressures, cellulose and its derivatives are subjected to dissolution (Hausmann et al. 2018, Henke and Treml 2013). Furthermore, uncommon solvents are known to toxic and expensive. Furthermore, the solvents cannot be produced as a large scale.

Selected non-derivatizing solvents of cellulose.

Solvent Type	Solvents	Advantages	Disadvantages
Aqueous solvents	Aqueous alkali containing solvents (e.g. 10% NaOH, NaOH/urea systems)	No degradation of cellulose	High processing cost; recovery issue; and low maximum concentration
	Aqueous inorganic complexes (e.g., Cuam, Cuen)	Good solution properties	Harsh conditions; strongly colored; and toxicity
	Molten salt hydrates (e.g., $LiClO_4 \cdot 3H_2O$, $LiSCN \cdot 2H_2O$)	Effective for cellulose with high degree of polymerization	Thermal instability; and high cost
Non-aqueous solvents	N-methylmorpholine-N-oxide (NMMO)	Capable of dissolving high concentrations of cellulose directly; and high recycle ratios	Instability of NMMO; and cellulose degradation
	Ionic liquids (ILs)	High maximum concentration; ILs themselves are chemical and thermal stable and non-flammable	High cost, high viscosity, sensitivity to moisture content and cellulose degradation
	Dipolar aprotic solvents/LiCl (e.g., N, N-dimethylacetamide (DMAc)/LiCl)	No degradation of cellulose; and good cellulose solution stability.	High cost; harsh conditions (activation, water content)
	Dimethyl sulfoxide (DMSO) containing solvents (e.g., DMSO/tetrabutylammonium fluoride (TBAF))	Capable of dissolving cellulose with a DP of up to 1200	Harsh conditions (water content in the system plays a crucial role)

Figure 7. Tables of Non-derivatizing Solvents of Cellulose (Dai et al. 2018).

As seen in **Figure 7**, only Nmethylmorpholine-N-oxide (NMMO) solvent is produced at a large scale. This man-made derived cellulose fiber goes by the name of Lyocell®. Although the solvent used is produced at a large scale to support the dissolution of cellulose, it is complex, expensive and has high energy demand (Dai et al. 2018). However, the production of NMMO is a success and offers an advantage for cellulose dissolution as compared to other cellulose solvents for its application in 3D printing.

A study had been conducted by Li, Zhu and Yang (2018) focused on using NMMO to support the dissolution of cellulose. They were successful in producing complex structures by utilizing 3D printing with dissolving pulp. The results indicated that the cellulose based 3-D printed showed good results of compressive and tensile modulus, which was turned out to be 12.9 MPa and 160.6 MPa respectively. The researchers came to the conclusion that the use of NMMO-dissolved cellulose can be used in 3D printing in various industries with specific focus on printing 3D structures that are complex.

As indicated in literature, the use of ionic liquids has been studied. They have been primarily been investigated as solvents for cellulose. Ionic liquids are termed the liquids that form salt groups, which are available in aqueous form below the temperature of 100 °C (Henke and Treml 2013). with chemical and thermal properties, they have stability, their vapor pressure value is low and they are less hazardous. Cellulose can be used with ionic liquids (ILS) to dissolute them. They can be restored through the adoption of the coagulation process by the adoption of water, which helps in increasing the cellulose's application. When cellulose is submerged in ILs, they become highly viscous. For some applications, this response is viewed as a disadvantage (Compton and Lewis, 2014). In the case of 3D printing ink, this fact can be a benefit.

This can be one of advantage of a 3D printing ink but drawback in case of some applications. A research conducted by Markstedt, Sundberg, and Gatenholm et el. (2014) demonstrated use of dissolved cellulose in IL with its use in additive manufacturing technology for printing 3D structures. The non-solvent system used was water. The results of the study revealed that the solution of cellulose showed a "shear thinning behavior" (Markstedt, Sundberg, and Gatenholm 2014). When the printing was being done, the viscosity of the cellulose lower because of the high shear value. However, viscosity of the solution increases once the

printing stopped. The researchers highlighted that for 3D printing, the solution of cellulose with 4% dissolve pulp is ideal for printing. The viscosity at this percentage is enough to print and keep the shape after dispensation. At the same time, dispensation pressure is lower that it can be produced through the aid of a syringe-based pump (Markstedt, Sundberg, and Gatenholm 2014).

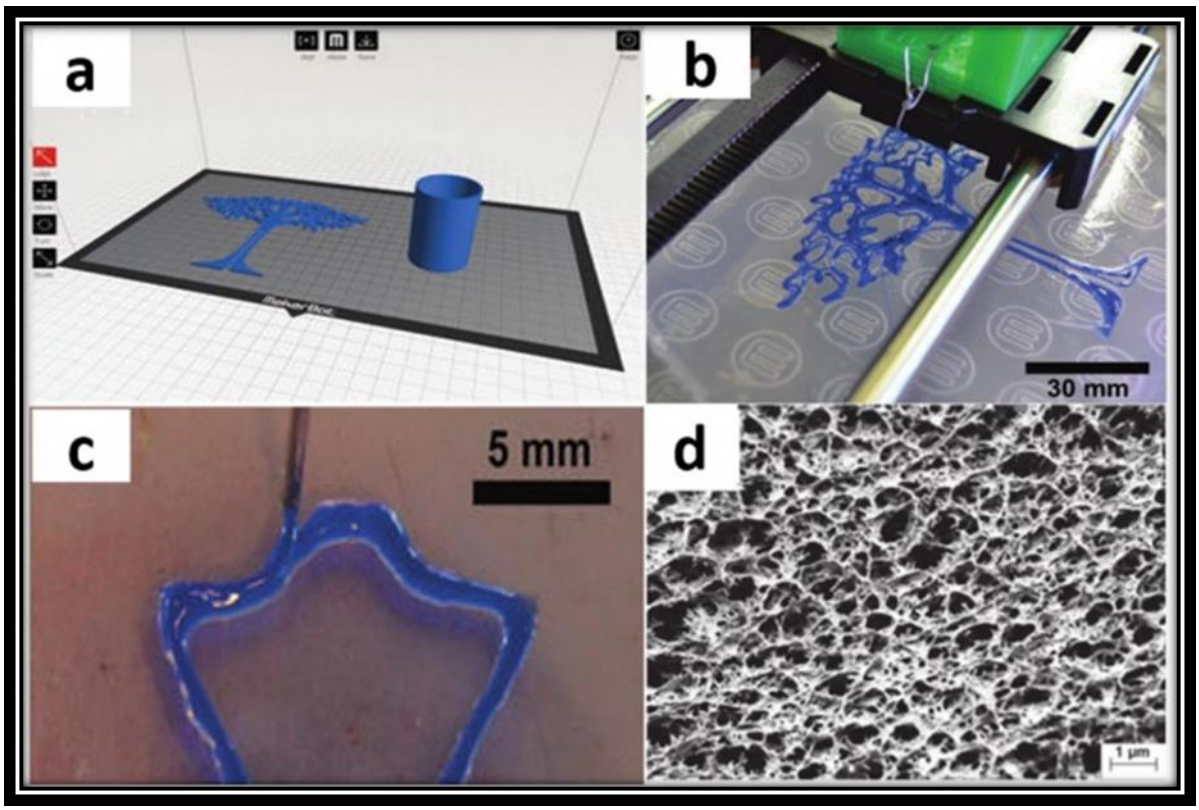

Figure 8. Cellulose Regeneration through IL with Coagulation Process (Markstedt, Sundberg, and Gatenholm 2014).

As seen in **Figure 8**, regenerated cellulose gels had been adopted with the help of IL through using water and coagulation process. The structures that were printed exhibited porous structure, which was highly interconnected to one another as seen in **Figure 8**. This method is considered to be instrumental in producing cellulose based gels that can be used in a various setting including manufacturing, construction, architecture, tissue engineering, biomedical engineering, etc.

2.1.4 Cellulose Ethers/Esters for 3D Printing

As indicated in literature, cellulose esters and ethers have been derived from cellulose. They have been used for wide ranging commercial purposes. They have been used as varnishes, casings, membranes, emulsifiers, binders, etc (Palaganas et al., 2017). Cellulose ethers, which are water soluble and available industrially include hydroxyethyl cellulose (HEC), hydroxypropyl cellulose (HPC), and ethyl carboxymethyl cellulose (CMC) cellulose (EC) (Dai et al. 2018). When cellulose is subjected to esterification, it can be converted into various forms. It can be in fibrous form or solution. In some cases, it can also be produced as 3D objects. Dai et al. (2018) asserts that commonly available cellulose esters consists of cellulose acetate (CA), cellulose acetate butyrate, nitrocellulose. They are economically sustainable, cheap and abundantly available. They have superior properties. They are highly soluble. In terms of chemical stability, their stability is high. They are also safe in terms of physiologically.

Cellulose ether	Roles in product	Applications
Methyl cellulose (MC)	Water absorbent; tablet disintegrant; binder; extrusion aid; stabilizer; strengthener; viscosity modifier; emulsifier	Tablet; battery; edible barrier; etc.
Ethyl cellulose (EC)	Matrix; binder; thickener; film former; coating (as a protective layer);	Solar cell; tablet; cosmetic; etc.
Hydroxyethyl cellulose (HEC)	Tablet disintegrant; film former; viscosity modifier; stabilizer; suspending agent; and sizing aid	Tablet; solar cell; sensor; etc.
Hydroxypropyl cellulose (HPC)	Viscosity modifier; binder; coating; film matrix; stabilizer	Sensor; ophthalmic inserts; tablet; etc.
Hydroxypropyl methyl cellulose (HPMC)	Water binder; viscosity modifier; tablet disintegrant; film former; and sizing aid	Edible film; drug; emulsion; etc.
Carboxymethyl cellulose (CMC)	Stabilizer; emulsifier; tablet disintegrant; viscosity modifier, suspending aid; binder; film former; water absorbent; sizing aid; and metal ion adsorbent	Barrier substance; detergent; mining; paper; textile; oil drilling; food; pharmaceutical; etc.

Figure 9. Cellulose based Ethers, and their Usage (Dai et al. 2018).

Research suggests that cellulose ether exhibit superior biodegradability. Watch et al. (2001) states that the use of hydrogels that are of CMC based is known to degrade at a rapid rate when cellulose is present. When the concentration of a carboxyalkyl group or hydroxyalkyl group is subjected to variation, the cellulose based ethers produced have superior properties. They have the ability to retain water, better ability to produce films and act as membranes, their surface activity improves, and they exhibit pseudoplasticity. Watch et al. (2001) states that they can be used for a many purpose including pharmaceutical sectors, cosmetics sector,

food sector, etc. As in **Figure 9.**, the commonly used cellulose ethers have been illustrated with their applications.

2.1.4.1 Cellulose Ethers and Viscosity

The synthesis of literature suggests that cellulose ethers can be used as modifiers for viscosity for wide ranging applications (Dai et al. 2018, Wang et al. 2018, Xu et al. 2019, Xu et al. 2018). With intracellular and intercellular hydrogen bonding, the vicinal cellulose can restrict the motion of water and thus, allows in the increment of the viscosity. With the application of the externally, applicable force, the bonding of hydrogen between the network of cellulose chains breaks up and thus, the alignment of the chains changes its direction to that of the flow. When this happens, then the viscosity is subjected to thinning. This thinning behavior is called pseudoplastic behavior. At higher shear rates, the cellulose ether solutions become fewer viscous. When the shear force is removed, the viscosity is maintained (Fu et al. 2017). As cellulose ethers have pseudoplasticity properties, they can be used in 3D printing as inks. Many of the ethers which are based on cellulose such as CMC, HPC and EC have been adopted in 3D printing inks to modify the viscosity. In some cases, they have been used to improve and enhance the viscosity of the ink while, flocculation kinematics (Palaganas et al., 2017). They are also been utilized in additive manufacturing for supporting the creation of spanning structures, which do are unsupported. Varying cellulose ether mixtures can be enhanced to improve the ink viscosity of ink. In a research conducted by Sun et al., HPC and HEC based cellulose aqueous solution had been used to construct the 3D print of architecture of the micro battery (Xu et al. 2018a).

2.1.4.2 Binding Properties of Cellulose Ethers

In 3D printing, cellulose ethers can be used to create a two-dimensional image of a computer model with the help of using an appropriate binder. When selecting the binder, it is essential to use materials that are of exceptional and high quality with excellent mechanical properties (Xu et al. 2018a). The additive manufacturing is greatly influenced by the properties of binder. HEC is frequently used as a binder in 3D printing (see Figure 10). For powdered glass frit, HEC has been used as a binder and has been known to exhibit structural stability (Dai et al. 2018). As indicated in Figure 10, the cellulose based ethers mentioned is also used to form binders in order to create products with different porosities. CMC based;

sodium salt is also used to fashion glass foam. Tanwilaisiri et al. (2016) experimental investigation focused on creating an electrochemical supercapacitor through the utilization of 3D printing. In their research, they used carbon electrodes for which CMC was used as a binder. In another research study by Henke and Treml (2013), efficiency of MC as a binder had been investigated for wood-based chips in 3D printing. The results of the study demonstrated that the product exhibited poor mechanical properties.

2.1.4.3 Cellulose Ethers Usage in 3D printing Excipients

As indicated in literature, cellulose ethers are been utilized as 3D printing excipients (Dai et al., 2018). They are being instrumentalized for developing of drug delivery systems and can help in drug delivery system completion which are complicated, synchronized and designed. Zhang et al. (2017) assert that the 3D printed tablets have demonstrated a longer time duration for the release of the drugs as compared to tablets that have been subjected to direct compression. They assert that this response is because they have smooth surfaces with dense structures. For oral delivery, the release time for the drug is essential and therefore, with the medium contains the drug and a workable barrier on polymers can be realized (Zhang et al., 2017).

Hydrophilic cellulose and ethers have been frequently utilized in field of pharmaceutical as excipients because of their ability to accomplishing regulated augmentation properties of releasing the drug when it comes in contact with liquids such as water (Sannino et al. 2009). When water or liquids react with cellulose ether-based tablets, the result is the formation of physical hydrogel and chain tangled meshes. The water is responsible for dissolving the drug and released from the polymer-based network when the cellulose ether expands. It moves and comes out from the swollen surface (Sannino et al., 2009). The chain entanglement can occur with the expansion of the cellulose gel, depending on the type of cellulose used. The result is a complicated arrangement of expansion, dispersion and “erosion mechanism” (Sannino et al., 2009). For the delivery systems based on erosion mechanism, HPC, EC, HEC and HPMC (see **Figure 9**.) cellulose-based ethers are frequently used by the pharmaceutical industry (Sannino et al. 2009; Maroni et al. 2016). Because of its high expansion properties, HPMC is the most frequently utilized as excipient for drug delivery

systems (Khaled et al. 2014, Khaled et al. 2015a, and Khaled et al. 2015b). The release of the drug based on HPMC has been discussed by Reynolds et al. (1998).

The mechanism is a two way process. During the first process, the drug is defused by the formation of an expansive hydrogel-based layer. The second process is based on drug through the erosive structure of the layer that has expanded. Wang et al. (2018) states that the use of HPMC in different combinations with other substances such as mixtures of polyvinyl acetates, poly vinylpyrrolidone, and stabilizers such as silica and sodium lauryl sulfate, has been fabricated in “structured dosage forms” through the help of 3D printing. The authors assert that HPMC is responsible for creating a pathway for releasing the drug.
Meclocchi et al. (2015) studied the usage of HPC expanding/eroding agent for production of “capsular oral pulsatile delivery devices." Study results indicates and verified its applicability of 3D printing in this domain. As asserted by Dai et al. (2018), pulsatile delivery is described as subsequent releasing of drug during a small period after the prearranged off-release phase. The use of HPC has also been reported to create tablets with the help of 3D printing in combination with other polymeric materials. It has been reported by Peitrzak, Isreb and Alhnan (2015). EC based, cellulose ether has also been investigated by several authors for 3D printing of tablets.EC being insoluble in water, it's penetration in the table increases. Furthermore, in HPMC based tablets, it enhances their strength because of its adhesive bonding with the HPMC (Sadia et al. 2018, Tian et al. 2019, Vithani et al., 2019).

As pointed out by Sadia et al. (2018), 3D printed EC drug matrix has greater efficiency as compared to conventional compacting methods. This response is because of the interaction between EC and HPMC matrix which reacts together to form a strong adhesive bond. This in turn, helps in improving the HPMC’s gel strength that slows down the release of the drug. Consequently, EC’s ability to slow down the release time within the matrix is because of two core reasons. The tablets experience a change in penetration, and the strength of the gel increases because of different bonding and interactions (Tian et al., 2019). Vithani et al. (2019) suggests that the use of EC based drug impact created with assistance of 3D printing ability of EC demonstrated.

2.1.4.4 Cellulose Ethers as Plasticizing Agents

Cellulose ethers have been used plasticizing agents for ensuring that the viscosity of the ink to support the material procession at a temperature that is required with the intention of thermal degradation risk reduction in additive manufacturing (Dai et al., 2018, Dayagi et al. 2016, Ligon et al. 2017, Shatkin et al., 2014). According to Shatkin et al. (2014), MC has good plasticizing properties. As reported by Dai et al. (2018), it is used in the formulation of absorbents in CO2 for additive manufacturing.

2.1.4.5 Cellulose Ethers for Matrix Material

As indicated in literature, CMC has been used as a "matrix material" because of its ability to thicken its viscosity (Dai et al., 2018, Wang et al., 2018).

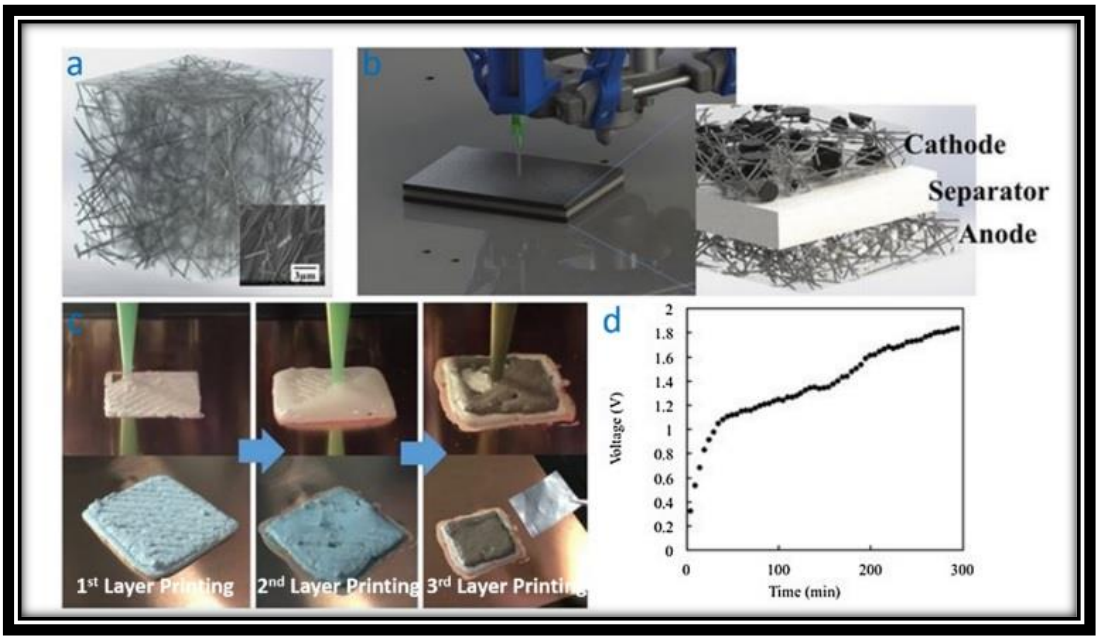

Figure 10. Additive manufacturing Process and Layout of Battery (Park, Kim and Kim, 2017)

In a study conducted by Park, Kim and Kim (2017), 3D conductor with CMC as matrix material had been created. The CMC based conductor with silver nanowire exhibited improved voltage (Park, Kim and Kim, 2017).

2.1.5 Cellulose Esters Usage as Matrix Material

As reported by Dai et al. (2018), studies pertaining to deploy cellulose esters for 3D printing are fewer although they have been available for quite some time. In a study conducted by Pattinson and Hart (2017), cellulose based ester used was cellulose acetate (CA). Using acetone to dissolve it, the solution had been subjected to 3D printing. The researchers concluded from their experimental investigation that the use of cellulose materials such a cellulose acetate can result in greater strength and toughness. Furthermore, they also resulted that it can be used for rapid customization in manufacturing facilities. Finally, the concluded that cellulose acetate exhibited as an ecofriendly, chemically unique and amply available material that can be used 3D printing or additive manufacturing (AD).

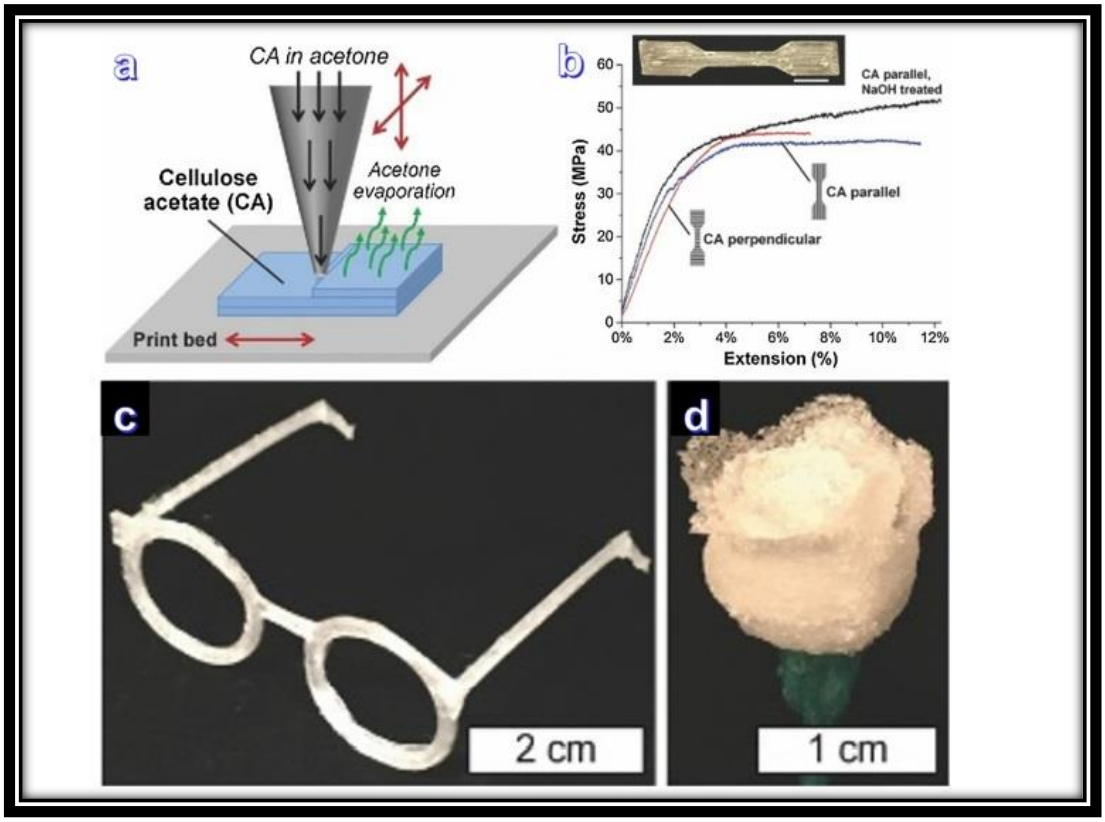

Figure 11. 3D Printing based on Cellulose Esters (Pattinson and Hart, 2017)

2.1.6 3D Printing of Microcrystalline Cellulose (MCC)

The synthesis of literature suggests that microcrystalline cellulose (MCC), which has been derived from cellulose has been used for 3D printing in manufacturing and packaging. It is obtained by subjecting the cellulose fibers into hydrolysis with the use of low concentrated mineral based acids. MCC found in a crystalline, powdered form, having the dimension of length above 1 µm (Xu et al. 2018b). As indicated in literature, it is insoluble in most of the solvents and therefore, when is immersed in water, creates suspensions that are colloidal Xu, 2019). In pharmaceuticals, it is used as an emulsifying agent. It is also used a rheological modifier, binder, and water retainer. MCC are deployed for 3D printing for various applications.

2.1.6.1 MCC used an Excipient

As indicated in literature, for excipient MCC is utilized. The concentration and the purpose of its usage varies with MCC excipient functionalities (Dai et al. 2018).

Table 1. *MCC Concentration Levels and its Usage in 3D Printing. Adapted from Dai et al. (2018)*

MCC Concentration Level	Application
5% to 20%	Anti-adherent
5% to 15%	Disintegrant
20% to 90%	Diluent

According to Winter et al. (2017), MCC is used in 3D printing to create oral forms in pharmaceuticals. According to experimental investigations, 3D printing can create dosage forms with significant accuracy with lowered active content ranging from between 10 to 12 moles in a single tablet. Testing of the samples have been done for their harness and friability through the incorporation of 3D printing have shown comparable results when compared to standard techniques used. In another study conducted by Tao et al. (2017), it has been verified that tablets can be fabricated in bulk by MCC using 3D printing. As indicated in

research conducted by Khaled et al. (2014), it has been reported that MCC as an disintegrate helps in releasing, the 3D printed tablets efficiently and immediately when interacted with water.

2.1.6.2 Reinforcing Properties of MCC

MCC has been identified as a strong reinforcing property and therefore, at lower levels it can enhance mechanical strength of materials. This response occurs because of the transference of stress from the structure to the MCC, which stops creating stress concentrations (Sequiera et al., 2017). According to Wang et al. (2018), Young's modulus value of MCC's is 25 ± 4 GPa. When compared to materials such as silica and glass fibers, it has been found that it is more sustainable, has lower weight, economically priced and shows resistance to abrasion (Dai et al., 2018). According to Sultan et al. (2017), MCC has shown to improve the polylactic acid (PLA) matrix by reinforcing it in 3D printing of bio composites. Additionally, it has shown to improve the overall crystal structure, and the modulus of storage in bio composites

2.1.6.3 Matrix Properties of MCC

As suggested in literature, MCC has shown excellent properties in improving the matrix of preparing materials by deploying 3D printing after the utilization of a solvent required. In a research conducted by Gunasekera et al. (2016) Printing of MCC using 3D ink-jet technology, the solvent system used ionic liquids. These ionic liquids used were responsible for MCC solution decreasing viscosity. During the same time, they were responsible for maintaining the cellulose's solubility (Shin and Hyun 2017). The results of the study indicated that the 3D printing based on cellulose samples is efficient. However, it also revealed that viscosity plays a fundamental role in influencing the overall 3D printing procedure.

2.1.7 Nanocelluloses in 3D Printing

Nanocelluloses consist of CNC and CNF. They are made from cellulose through a different method such as physical methods, chemical methods and enzymatic methods (Sethi et al.

2018). It is an extension of micro fibrillated cellulose (MFC) known for its flexibility. They have a length dimension of above 1 μm. CNC on the other hand, is called nanocrystalline cellulose (NCC). It comprises rod like structures that are rigid. the particles vary from 100 to 200 nm (Wang et al. 2018, Dai et.al 2018). They diameter of these particles range from 3 to 10 nm.

In the 3D manufacturing and packaging industry, Nanocelluloses have been identified as sustainable and natural materials that offer many interesting properties such as changeable chemical composition, strength and surface area. They have the potential to be used in various sectors including construction sector, biomedical engineering, energy sector, manufacturing and industrial sector and packaging sector (Shao et al. 2015, Sethi et al. 2018). Additive manufacturing of biodegradable compounds in packaging and manufacturing, can offer better prototyping, mass customization and rapid production. However, further research is needed to ensure that cellulose and wooden based bio inks that are supportive in compatibility and printability.

Nanocelluloses are workable to be used as a substrate for printing workability. Furthermore, it can be utilize as bio-inks for 3D printing of the packaging and related applications. Nanocelluloses have demonstrated its “noncytotoxic against series of cell lines” (Dai et al. 2018). Thus, nanocellulose can be efficient in 3D printing.

2.1.7.1 CNC for 3D Printing

As indicated in literature, CNC has crystalline structures. They length of their fibers varies between 50 to 500 nm, with diameters ranging between 3 to 10 nm. They are generally produced through the hydrolysis of acids. Studies have suggested that mineralized acids can be used to prepare it (Henke and Treml 2013, Jia et al. 2017). In other studies, it has been suggested that oxalic acid formic acid, maleic acid and that is organic to produce CNCs. They are better than in producing CNCs as they are organic and cost effective (Carreño et al., 2017). Liquid CNC can be used in 3D printing to replace thermoplastics. Hausmann et al. (2018) suggests that the use of CNC gels with limited shrinkage in structure with the help of 3D printing was used. It was followed by freeze drying. The CNC gel utilized created and

printed several shapes without the need of supporting materials. Strong Young's modulus and strong hydrogen bonding has been demonstrated in 3D structure (Carreño et al., 2017).

2.1.8 3D Printing CNF

The potential of CNF nanofibrils to be used for 3D printing has been discussed in literature. In green revolution, it is considered to be a popular choice. Based on the nanostructures, it can be one, two or three dimensional. In composite materials, it has been identified as a material that has attractive reinforcing properties. CNF is responsible for reacting with hydroxyl groups to form hydrogel. This hydrogel is flexible and has a strong inclination of having fibril tangles. It has a strong shear thinning property, which make it ideal for utilizing in 3D printing ink (Shao et al. 2015, Sethi et al. 2018). However, higher concentration of CNF can lead to problems in 3D printing because of modifications in its properties related to rheology.

Sethi et al. (2018) asserts that the printability of CNF based material is easy to use as it exhibits uniformity in extrusion and stability in the formation of the printing pattern with a higher printing resolution. However, when the concentration of the CF increased, the problems with clogging and structural deformation in 3D printing (Palaganas et al., 2017). The researchers asserted that the problem occurred because of the large fiber particles of the CNF after the process of fibrillation.

The possible cause of the problems could be because of the flocculation of the material when pressure was exerted on the syringe. However, it has been reported that that a paste of CNF by 0.8% with semi-skimmed milk powder (SSMP), offered better and superior shapes when printing 3D objects in the packaging industry (Peng et al. 2018, Shao et al. 2015, Sethi et al. 2018).

According to Palaganas et al. (2017), 3D printed hydrogels have been commonly used in packaging and industrial manufacturing. It is used to change the CNF hydrogels into 3D objects for mass customization and production. As compared to polymer-based hydrogels, CNF offers several benefits. For example, they are eco-friendlier and more cost effective. Also, they are abundantly available. The most significant advantage of CNF hydrogels is that they are geometrically stable and the rapid gelation is responsible for ensuring that the

object is not deformed during and after printing (Peng et al. 2018). Usually it is assumed that the use of CNF is responsible for improving the solidity and steadiness of the printed objects through enhancing their properties because of the shearing alignment. CNF studies have demonstrated that it can be a good choice of ink for 3D printing with specific focus packaging sectors (Pandey 2015).

2.1.9 Lignocellulosic Materials

The analysis of literature suggests that 3D printing based on FDM technique using lignocellulosic materials have been conducted. However, the utilization of such material has been identified as challenging. They can decompose thermally before being a subjected extrusion. However, they are known to enhance mechanical properties in 3D printed objects. Collectively, they are eco-friendly and have been acknowledged as materials that can reduce carbon emissions.

Combining plastics with lignocellulose powder is possible in 3D printing. Henke and Treml (2013) studies focused on using chips of wood with binding materials such as cement, gypsum, and sodium silicate with water-based activator. 3D printing of Wood powder combined with an adhesive has been studied by Kariz et al. (2015). In another study, liquid deposition modelling process had been studied (Rosenthal et al. 2017). The use of the lignocellulosic materials showed printability but also revealed that these materials did not have strong mechanical properties. Tao et al. (2017) have suggested that the use of cellulosic materials with polypropylene or PLA can be utilized in FDM. Montalvo Navarrete et al. (2017) also proposed the same. Wood flour-based filaments have been used in FDM printing techniques, indicating that they are printable. However, such objects have low mechanical properties. Tran et al. (2017) has reported that the use of wood particles in 3D printing has been problematic because of nozzle blockage in FDM techniques. In this domain, wood floor particle control must enhance its efficiency to be used as filaments in FDM techniques. By Wang et al. (2018), commercially available lignocellulosic materials include algae polymers, hemp, and bamboo. They have reported that additives have been combined with lignocellulosic materials to improve their mechanical properties (Wang et al., 2018). At the same time, Pakkanen et al. (2017) have reported that the use of biodegradable wastes and lignocellulosic materials as filaments in 3D printing can be overcome by the quantity of undisclosed ingredients available in market as filaments that enhance printability and

mechanical properties. The issue of sustainable 3D printing needs to be taken care of by utilizing the waste filament material and reuse of recycled biodegradable waste and 3D printed parts (Pakkanen et al. 2017). lignocellulose materials 3D printing Problems are addressed. Reason for low quality of 3D prints using lignocellulosic materials consist of diverse quality of raw material, polymer matrix consisting of distributed lignocellulose powder in it, lack of adhesion in material matrix between hydrophobic polymer and hydrophilic lignocellulosic lead to component's shape inconsistency.

2.2 3D Printing Technology Used for Wood/Cellulose

3D printing techniques, the literature has identified the following techniques that are commonly used:

- Materail Extrusion Method
- Direct Energy Decomposition Method
- Power Bed Fusion Method
- Binder Jetting Method
- Vat photopolymerization Method

3D based printing techniques use cellulose and wood-based materials. This section of the research aims at discussing these techniques. As biodegradable materials, wood, and cellulose biopolymers offer efficient properties such as high thermal stability, versatile chemical composition, that can be modify and binding properties that makes them ideal for 3D printing (Correa et al., 2015). In this research, wooden and cellulose based techniques for 3D printing have been discussed.

2.2.1 Extrusion Technique

According to Wang et al. (2018) in 3D printing, extrusion technique is the most widely used. In this technique, the material is excreted from a nozzle to deposit one layer after the other but before the previous one is subjected to cooling in order to achieve structural stability. The 3D printing techniques that come under this category include direct ink writing (DIW), micro extrusion 3D bioprinting and fused deposition modelling (FDM). FDM and micro extrusion are illustrated in **Figure 12 (a) and (b)**

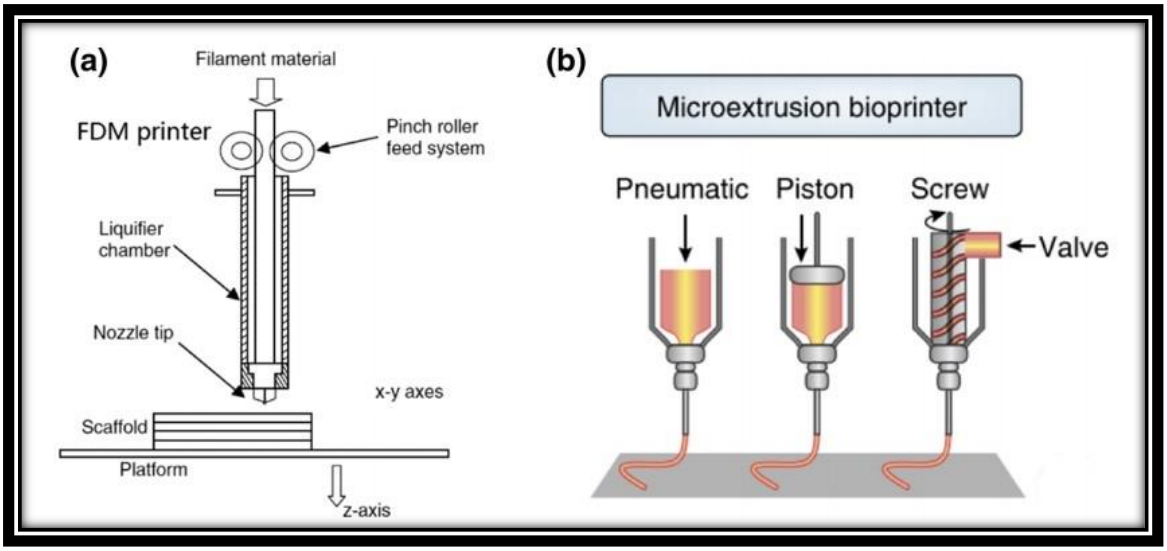

Figure 12. 3D Extrusion, Printing Technique (Wang et.al 2018)

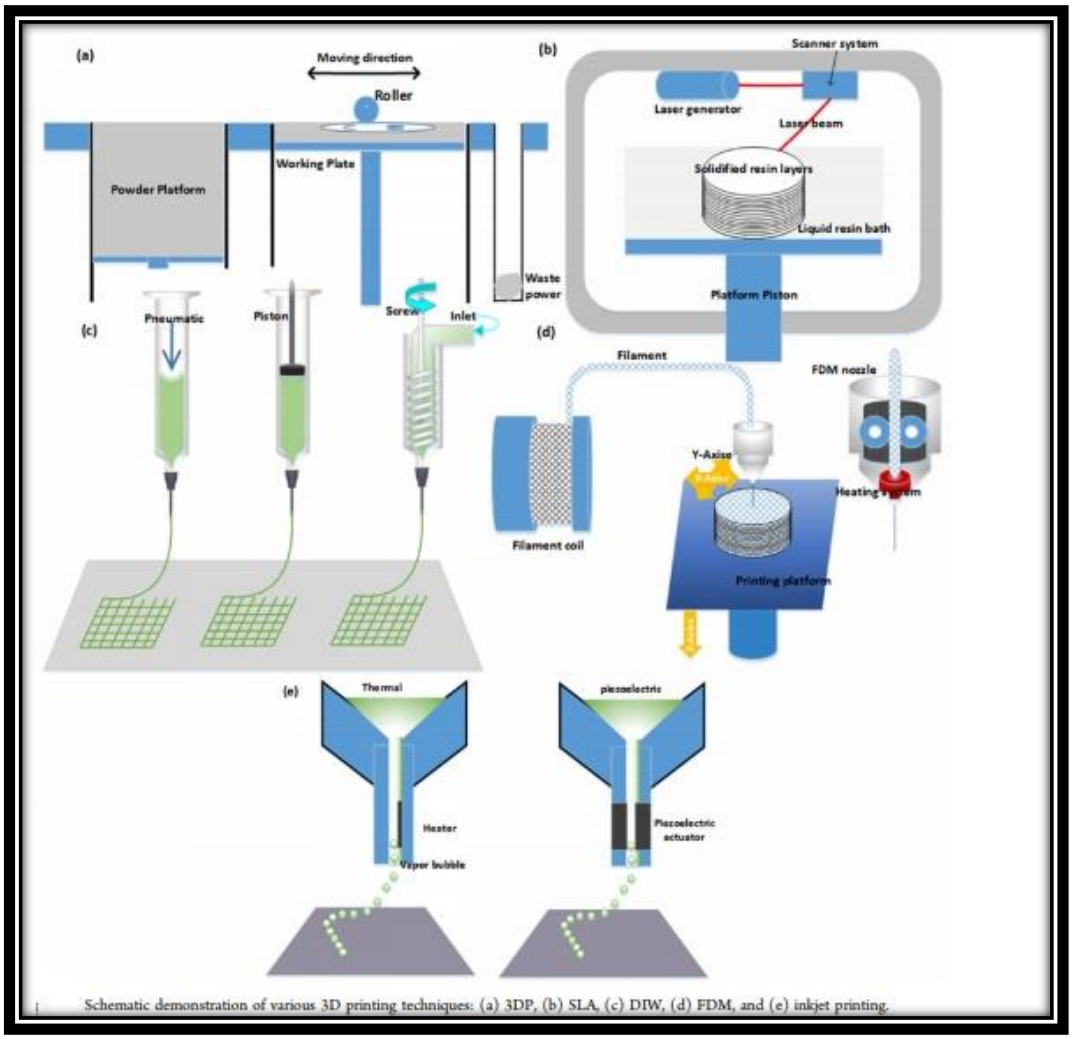

Figure 13. Schematic Diagram of 3D Printing Techniques based on Wood and Cellulose Materials (Wang et al., 2017).

As wide-ranging materials are available extrusion 3D printing is popularly used. Materials such as cellulose derivatives, cellulose nanoparticles and lignocellulosic materials are commonly used in this technique (Chung et al. 2013). According to Hochleitner et al. (2015), smaller diameter filaments are difficult to be produced when using this technique. This response is because the liquid material experience “die swell," when it is excreted from the nozzle (Hochleitner et al. 2015).

2.2.1.1 Hydrogen Extrusion

As seen in **Figure 13 (c),** the Direct Ink Writing method or more appropriately, the hydrogel extrusion method has been illustrated. In these methods, 3D printing utilizes the use of slurries or hydrogels. In this technique, the inks with properties such as shear thinning and sufficient rheological modulus are utilized. With the help of the reservoir that is as the syringe, the hydrogel is stored (Prakash et al. 2019, Wimmer et al. 2015). This reservoir is connected to the nozzle that has the ability of dispense the hydrogel atop the printer. As the syringe causes displacement, the ink flows through the nozzle. This causes stress in it consequently; the hydrogel’s viscosity reduces. That allows the ink to move. After the deposition of the hydrogel, it solidifies to form a 3D object (Wimmer et al. 2015). In Direct Ink Writing, hydrogel use as a printing ink is efficient. The analysis of literature suggests that the hydrogels have exceptional chemical and mechanical properties that support creating 3D objects, supporting rapid prototyping and mass customization in the packaging industry (Prakash et al. 2019).

2.2.1.2 Solid Filament Driven Technique

In Solid filament-driven technique illustrated in **Figure 13(d)**, FDM one of the most frequently used techniques. FDM technique supports melting the material, allowing flowing and solidify. In manufacturing and packaging, it is readily used. Before printing, this technique is applied to manufacture the filament. The system has a feed roller, heater, and nozzle (Niaki, Torabi and Nonino 2019). Filament moves from these three components as it melts, the paste is subjected to heating and moves to be printed into different layers on the printing interface. The melted layer is dropped and deposited on the previous layer. Both layers are allowed to be fused. The material is allowed to be cooled in order to achieve in a

solid form. In some cases, a cooling fan is placed on the head of the extrusion to speed the process of cooling and solidifying (Prakash et al. 2019, Wimmer et al. 2015).

2.2.2 Inkjet Printing

Ink printing has been identified in literature as a 3D printing method in cellulose and wooden based materials in manufacturing and packaging industry. As seen in **Figure 13(e),** the thin ink droplets are excreted from the actuators for piezoelectric or thermal capability in a pattern that has already been predefined. Cross-linking, methods have been utilized to polymerize the materials that have been excreted out. In this technique, either acoustic or thermal forces are applied to eject the liquid in drops in micrometer diameter. The droplets are collected in substrate, which has been defined according to the user requirements. The benefits of this technique include speed, high accuracy and high resolution. Gunasekra et al. (2016) has reported that nanocellulose inkjet inks have gained popularity in ink spinners as bio inks. At Similar conclusion was also arrived by (Nechyporchuk et al. 2017). According to Dai et al. (2018) and Wang et al. (2018), biomaterials based on cellulose can be used for inkjet printing substantially. Inkjet has been identified as a method of creating 3D objects with efficient and fast-paced printing speed and a wider spatial resolution.

2.2.3 Solid Powder-Driven Technique

In this type of 3D printing techniques, binders composed of either organic or inorganic materials are used for inkjet printing in order to create different individual layers (Wang et.al 2017). Upon lifting of the powder reservoir, lowering of the printing assemblage must lower one layer before the next layer can be created. The roller is responsible for dispersing the powder. The overflow box collects the extra powder. For the new layer creation, binder is applied. These steps are repeated to prepare the intended customize design of the 3D object **Figure 13. (a)**.

2.2.4 Stereolithography

As indicated in literature, it most frequently used additive manufacturing. In stereolithography, the curing of the liquid photopolymer is subjected to light-based polymerization process. it has been identified as the first technique that was developed by Charles Hull in the year 1984. This technology is based on laser printing.

As in **Figure 13. (b)**, the light is used by this technique to preserve and harden, the ink that is in liquid form through one layer after the other with the help of light projector based on ultraviolet. “Photo induced polymerization takes place when the surface of UV light representing the cross section scanned the patterns on the surface of UV-curable monomer bath” (Wang et al. 2017, p.5665). Inside the sliced 2D cross-sections, the layer which has been cured is created. At the same time, the uncured layer stays in the UV based baths. The printer is movable vertically (Wimmer et al. 2015). **Figure 14.** shows its setup procedure.

Since it has a highly accurate source of light, its accuracy pertaining to manufacturing is relatively higher than other 3D printing techniques. It gives accurate details in thickness of the layer, enhanced quality of the surface area and in-depth information Wang et al. (2018). Both (Kumar et al.,2012) and (Feng et al., 2017) have asserted that the use of CNC has been implemented to the cured resins to improve its mechanical properties.

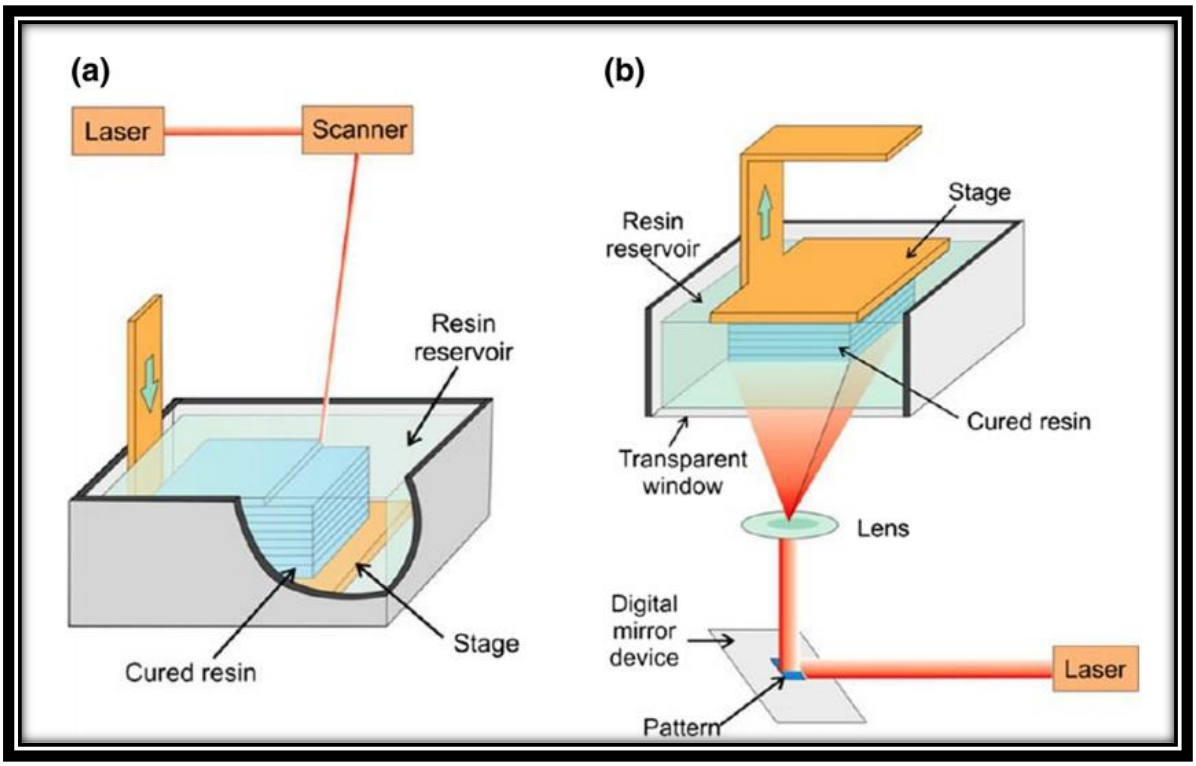

Figure 14. Stereolithography Printing Setup (Wang et al., 2018)

3 RESEARCH METHODOLOGY

This study provides the understanding and insight on wood and cellulose based materials and the different methods and the techniques used for printing them also suggest combinations and variations of wood-based material 3d printed various Research lab's and industries around the world. This intensive survey on wood and cellulose based material is done to for a better understanding of wood and cellulose based material limitations, feasibility and available technology.

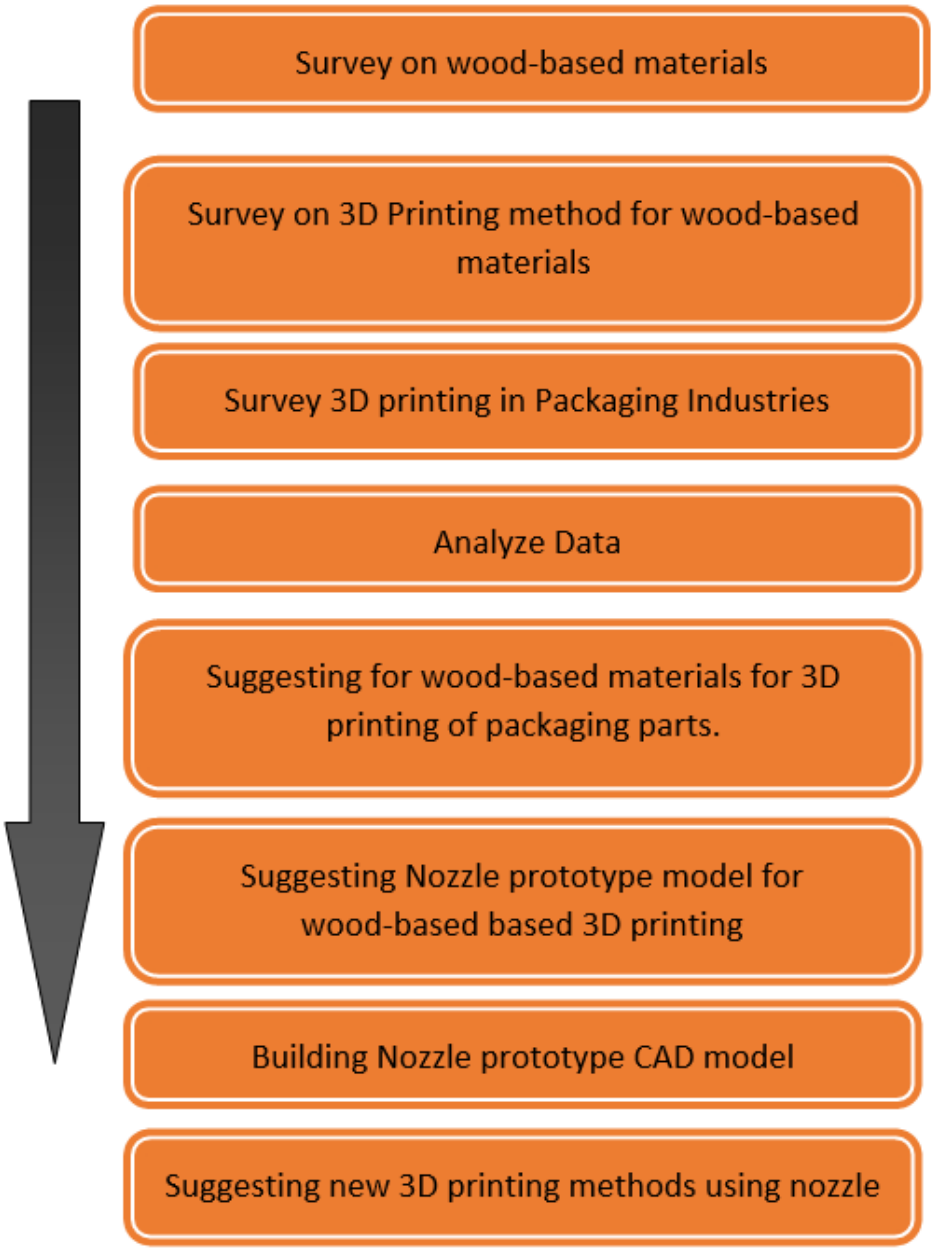

Figure 15. Research plan followed for getting results.

The following research plan was followed to get to reach the obtained result. Following listed research plan based on survey's data was collected from various sources for and based on that new design concept was introduced and its conceptual 3d CAD model was created in solid works software.

The design concept was introduced determined based on analyzing to overcome a problems in wood fiber printing as wood and cellulose is obtained by various natural organic material and every source the wood fiber size and properties differ this can also be observed in grinded wood powder that is used for 3d printing the particle size differs and results in low quality prints.

The second factor that is limiting the 3D printing is its time-consuming process despite its advantages so there is a need for printing method that can print time to great extent. So, considering these factors in mind new nozzle based 3d printed process idea was suggested and its 3D prototype model was created thus.

3.1 Data Collection Methods

It is important part of the research. Identifying data sources is a crucial stage for data collection process. The data sources have been identified, the next stage is to collect the data through a systematic way in order to ensure that it is of sufficient quality and quantity and was analyzed.

Primary Data: Collected from various databases including ScienceDirect, JSTOR, Sage Publications, ProQuest, EBSCO Host and Wiley.

4 RESULT & DISCUSSION

In industrial packaging, with availability of bio-degradable sustainable products in market 3D printing estimated to grow. The use of rapid prototyping with additive manufacturing is anticipated to grow. Small production, runs and design customizations are further going to gain popularity.

The sales of cellulose based printers are expected to grow. According to Ford and Despeisse (2016), sustainable and renewable additive manufacturing sector is expected be the fastest growing sector in the Canada, Europe, United States and United Kingdom. Strengths and Weaknesses of 3D printing in Packaging Industry All participants agreed that 3D printing is considered to be a catalyst that will lead to a new industrial revolution by revolutionizing packaging and manufacturing sector to a completely new level since it will support production and customization at a massive scale. Their responses had been tabulated in the form of SWOT table as illustrated in **Table 2.**

Table 2. *Benefits and Disadvantages of 3D printing for Cellulose and Wooden Based Materials*

Strengths	Weaknesses
➢ Support of rapid prototyping ➢ Support of massive customization ➢ Support of massive production ➢ Decreased labor costs ➢ Use of energy efficient and eco-friendly materials such as cellulose and cellulose based derivatives.	➢ Materials used in 3D printing to aid sustainability are still in development. ➢ Cost associated with 3D printing is high ➢ Material availability is limited
Opportunities	**Threats**
➢ Sustainable printing adoptability ➢ Adoption of massive customization ➢ Adoption of improving packaging industry sector through the use of biodegradable materials. ➢ Energy efficiency promoter	➢ Rights of consumers ➢ Copyright issues ➢ Labor and job losses

4.1 Additive manufacturing Benefits in Packaging Industry

1. Rapid Prototyping

3D based printing has been identified as a unique and innovative technique, which is responsible for accelerating rapid prototyping in the packaging industry. It is responsible for speeding the product development phase through rapid prototyping. The molds constructed can be beneficial in manufacturing the prototypes easily at an economical rate. 3D printing technologies based on cellulose and wooden derivatives are therefore, identified as cost effective and time efficient interventions with economic sustainability. The sources also suggest that the fabrication of single parts with 3D printing is considered to be economical as compared to techniques that include blow moldings, thermoforming and mold injection

2. Additive Manufacturing and Packaging Manufacturing

Wooden based materials utilization in 3D printing is expected to revolutionize the packaging machinery manufacturers substantially. For instance, robotic arms used in production processes can be printed with 3D printers based on wooden and cellulose derivatives. They are lightweight, flexible and energy efficient components with the use of cellulose and wood-based materials would become more efficient.

The analysis of the data also revealed that it is expected to change the way spare parts for machinery are being manufactured. 3D printers can allow manufacturers to produce these spare parts within the production facility without the need of contacting suppliers. This can reduce operational and shipping costs. Companies will be offering software package and machine package to the end user to print 3D prints of the spare part required for the manufacturing plant.

4.2 Wood and Cellulose Based 3D Printing in Packaging Industry and 3D Printing Techniques

1. Lignocellulosic Materials in 3D Printing

Using actively lignocellulose materials improved the of the 3D object mechanical properties with various printing techniques. Furthermore, they had been used because they are eco-friendly and economical. Lignocellulose powder has been used in 3D printing with other

plastic materials. Wooden chips have often been combined with materials such as gypsum and cement to create 3D printed objects. However, 3D wooden materials in bulk quantity result in poor and deformed printed objects. Polymer based filaments are used with lignocellulose materials in FDM printing technology to improve the quality of the 3D printed objects. Because of the consistency of the wooden based powder used with polymers, the end deliverable is not of high quality. The results of the survey also revealed that the presence of wood flour is responsible for altering the shape of the matrix, which in turn affects the binding capabilities of the composite. The end result is a deformed 3D object. The primary problem with printing with lignocellulose materials is the low quality printed object. In order to improve printed objects quality and its mechanical properties physical and chemical modifications have been undertaken to improve the interface of lignocellulose material and polymer matrix. However, lignocellulose-based material's usage in additive manufacturing is still slow in packaging industry even after modifications.

2. Cellulose based Materials in 3D Printing

Data revealed that in packaging industry CNC and CNF which are cellulose based materials were utilized in 3D printing. Using these as printing materials improves the overall mechanical characteristics of 3D printed objects. Both CNC and CNF, exhibit demonstrates superior aspect ratio responsible for enhancing filaments mechanical performance. Interview also revealed that both materials are eco-friendly, cost effective, and have unique properties such as strong strength, modifying chemical composition and strong surface area. Both materials can be used in the packaging industry to create rapid prototypes or to aid mass customization. It was also revealed that the use of CNC and CNF with polymers can help in producing 3D printer filaments that are biodegradable and economical.

3. Cellulose Hydrogels in 3D Printing

Cellulose solutions can potentially utilize in 3D printing as ink because of their shear thinning behavior and a viscosity modifier. This makes them ideal for 3D printing as:

- They can be excreted from the nozzles
- They provide a good shape structured object

The nanocellulose has a great potential to be used as 3D printer bio ink. Gel rheological properties are significant and are responsible for influencing the entire process. Shear thinning behavior, viscosity modifier, gelation and fluid flow is some of the properties that are ideal for the 3D printing process and therefore, CNC morphological and rheological behavior are of great significance. Solution Viscosity is depending on cellulose concentration and the polymerization degree. Furthermore, ionic solution strength, temperature, and pH value also affects the cellulose solutions.

4.3 Other Cellulose, Based Materials in 3D Printing

According to the analysis of the literature data cellulose solutions that use ionic liquids for dissolution offer viscosity, which can be used to produce 3D structures efficiently. Cellulose esters and ethers can be utilized as 3D printers' ink due to rheological properties and their shear thinning capabilities.

The literature also revealed that the use of wooden derivative materials for example cellulose ethers and nanocelluloses offers an important source of producing hydrogel fabrication, as they are economical and soluble in water. Both cellulose based ethers as nanocelluloses have been used as ether-based hydrogels as inks have been studied in 3D printing inks. Furthermore, Cellulose esters are important for the packaging industry for 3D printing. Although few studies have been conducted in this domain, ongoing research needs to be done to identify their suitability for 3D printing.

MCC is highly crystalline and is cheaper than cellulose nanocrystals (CNC). MCC has been used extensively in 3D printing with a specific reference to the packaging and manufacturing industry. MCC based, 3D printing inks can be produced by dissolving them in ionic solutions. MCC can be used as a replacement for CNC in 3D printing, acting as a reinforcement agent.

4.4 Nozzle Prototype

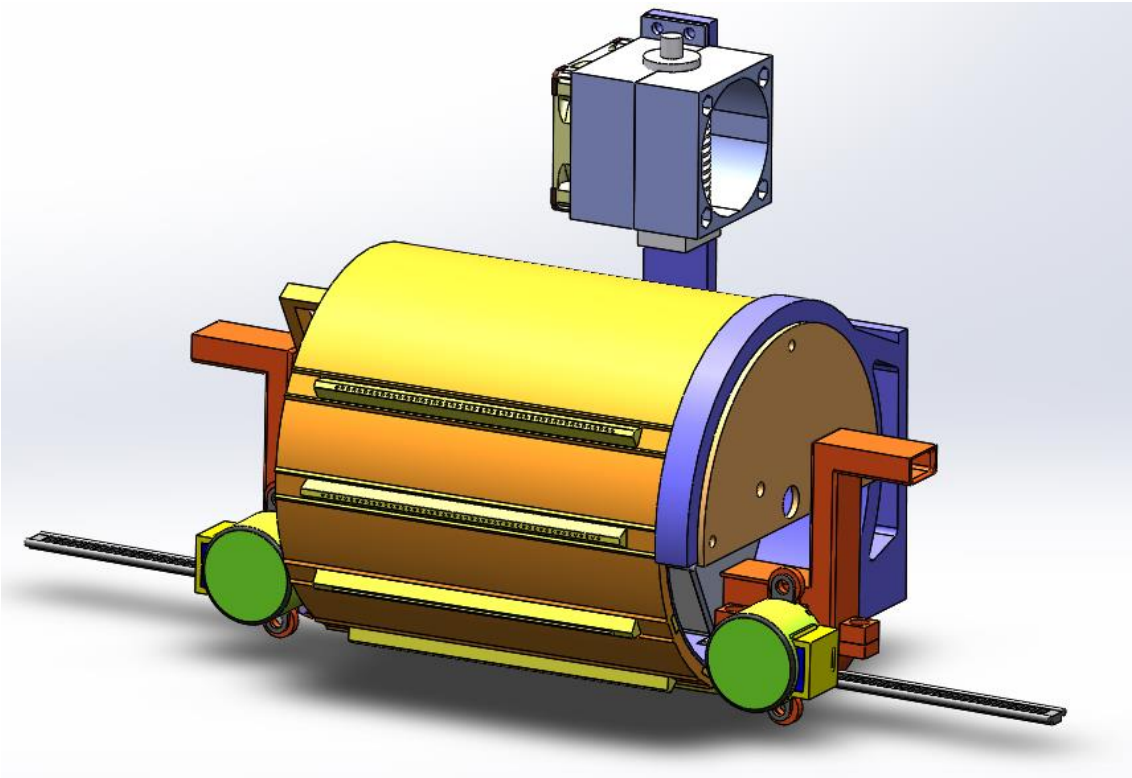

Figure 16. Nozzle Prototype for Paste based extrusion.

The nozzle prototype can be seen in **Figure 16.** above which was designed based on the results obtained from analysis of collected data based on study of wooden based material and different available techniques for printing with wooden and cellulose based materials.

The Suggested new Nozzle design is based on FDM technology using paste-based material for printing. The nozzle cross sectional view can be seen in **Figure 17.** that consist of base cylinder that holds a nozzle block with an opening facing below for material flow through this section of nozzle opening and that is blocked by using moving flexible selectors that controls opening and closing of this open space by sliding along nozzle opening and pushed and pulled in and out by using two stepper motors at both side end of the nozzle. By reducing and increasing the length of flexible selectors the opening space between them can be controlled allowing them to select various extrusion point for the nozzle die for material extrusion through it these can changed throughout the printing process for material extrusion

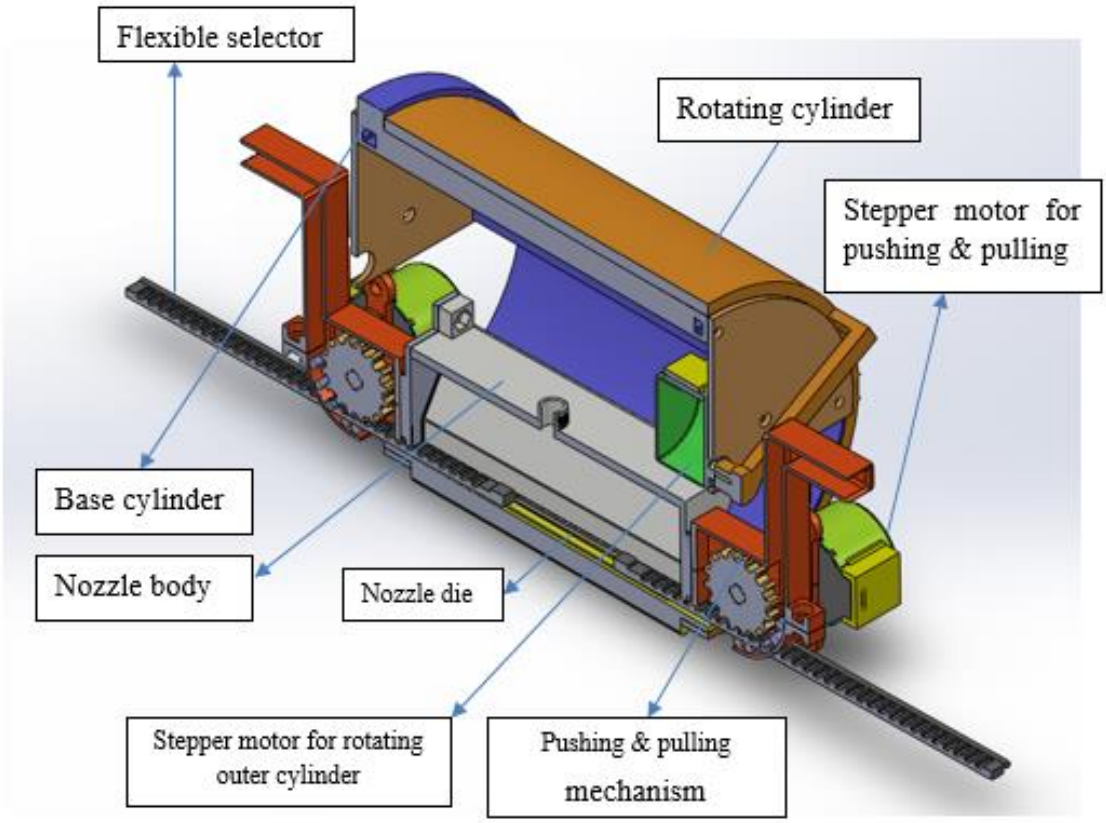

Figure 17. Cross sectional view of Nozzle assembly and its components.

In **Figure 17**.the base cylinder holds a freely rotating cylinder along its circumference that holds nozzle dies that are place at a 30-degree angle from each other and rotates along the base cylinder and different nozzle dies can be selected by rotating this rotating cylinder at a 30-degree angle until it is facing the nozzle opening and can be used to extrude material. The both sides of the nozzle are fitted with driver mechanism that drive flexible selectors that slides and act as valves for nozzle blocks and by controlling these selectors inside nozzle block that controls the open space between them for material flow through particular section of nozzle die. Nozzle block contains the heated fluid paste material pumped by mechanical or air pressured controlled.

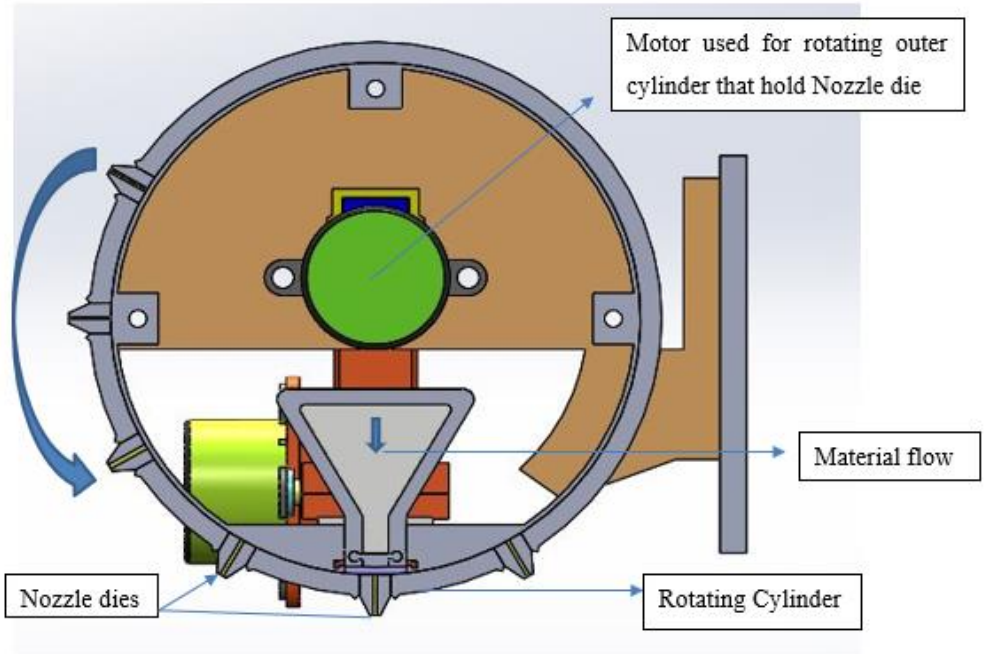

Figure 18. Die changing mechanism overview.

In **Figure 18** rotating cylinder that holds nozzle dies place at a 30-degree angle rotates along the circumference of base cylinder that rotates along the base cylinder and desired nozzle die can be selected by rotating cylinder at a 30-degree angle until it is facing the nozzle opening and can be used to extrude material. The both sides of the nozzle are fitted with driver mechanism that drive flexible selectors that glide and act as valves for nozzle block. By controlling these selectors inside nozzle block that controls the open space between them for material to flow through particular section of nozzle die. Nozzle block contains the heated fluid paste material pumped by mechanical or air pressured controlled pump. This nozzle design work on two Concepts:

1. Selective variable extrusion
2. Multiple die extrusion

1. Selective variable extrusion

In this **Figure 19.** below shows the working of this mechanism with the help of stepper motor's method which involves the use of variable extrusion through nozzle die via many extrusion points that are opened and closed using a flexible selector. This mechanism allows 3D printer to choose any number of extrusion points along the nozzle die to allow the material flow through nozzle block during the 3D printing extrusion process. Flexible selectors act as valves that slide along nozzle opening by pushing and pulling mechanism of stepper motor used to select the extrusion area for material to flow through nozzle die.

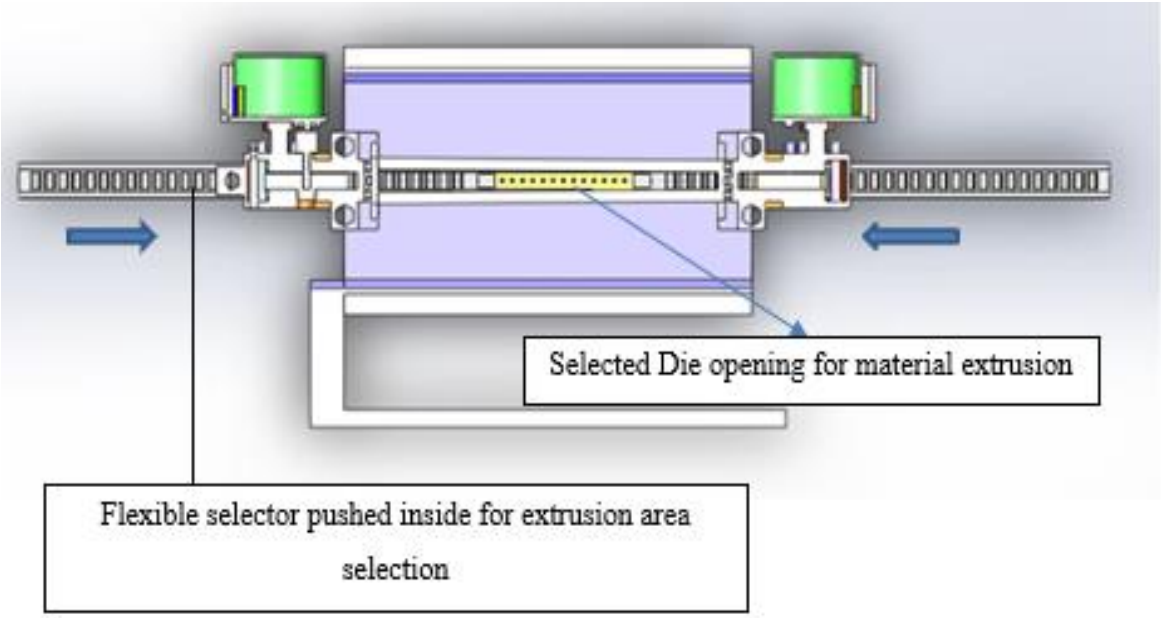

Figure 19. Die changing mechanism overview.

2. Multiple die extrusion

This method involved switching of multiple nozzle die of varying cross section for the material flow of various shapes and sizes during 3D printing process. Different sections of printing part during the extrusion process can be used to extrude material layer in different shapes and sizes this method can be used to decrease printing time by switching to different nozzles at different sections during the printing process according to the requirement of the part to be printed. In the figure below nozzle die selection rotation by stepper motor placed 30 degree apart from each other can be and nozzle die of varying shapes and sizes can be seen in **Figure 20.**

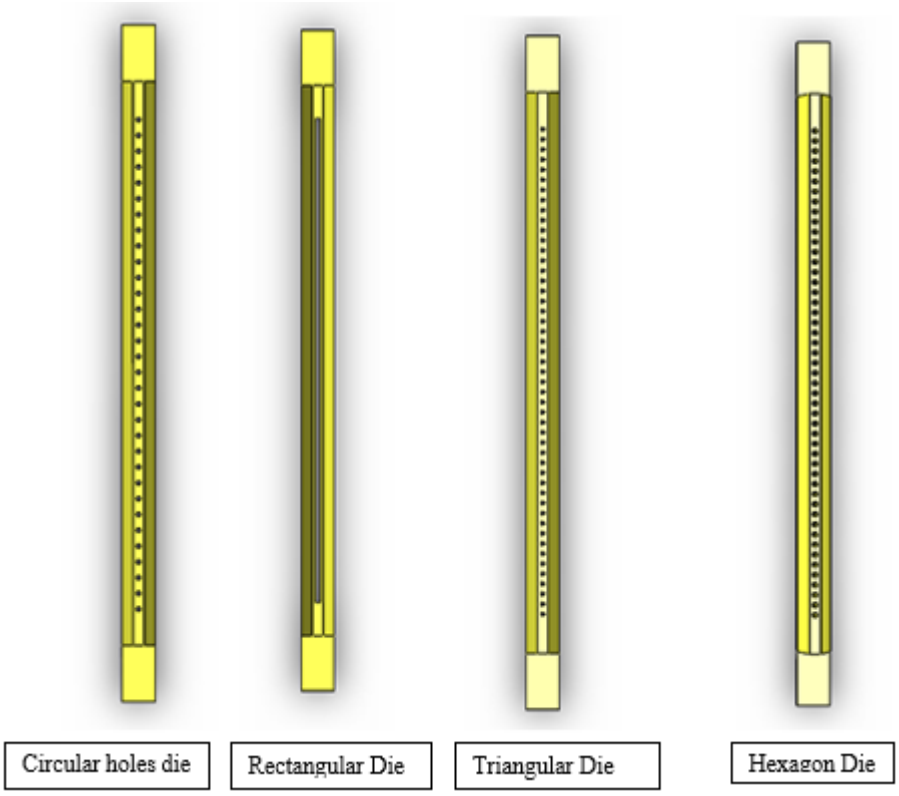

Figure 20. Nozzle Die changing overview.

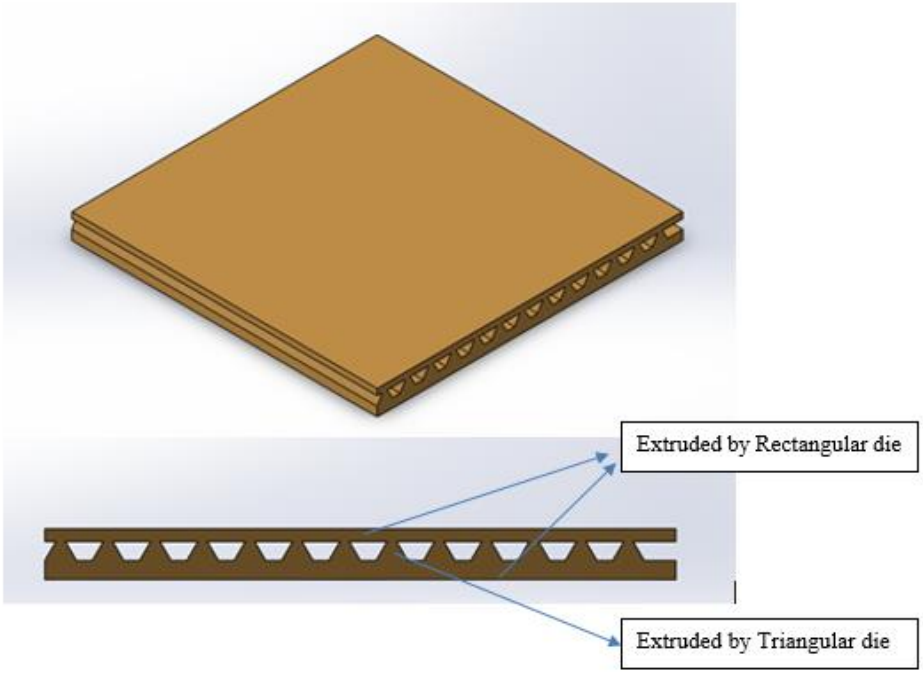

Figure 21. Part extrusion visualization by Nozzle design.

This methods describe two main advantages of this nozzle design that set it apart from other existing printing methods available in the market this will drive innovators and researchers to develop new printing strategies and implement them for industrial use and this nozzle's design also implement the use of nozzle die to extrude different shapes like shown in the figure above die with a different geometrical cross sectional area has been used. These geometrical cross-sectional shapes can be selected for product optimization and enhance printing particular section during print. One such example can be seen in **Figure 21.** where rectangular die used to extrude a first and upper layer of triangular extrusion by selecting nozzle extrusion area with help of selectors.

5 CONCLUSION

This thesis covers the study of wood-based materials that are used in packaging and in other industries using different printing methods in this thesis work collected based on the survey from various sources and new printing method is suggested based on which analysis from the surveys done the most common problem in 3D printing is that it consumes a lot of time which makes it a very slow process to be used in large scale manufacturing. This new prototype of nozzle is a design concept suggested that can reduce the printing time and can be utilized for large-scale manufacturing applications.

The present research focused on highlighting the use of 3D printing with cellulose and wood-based materials with a specific focus on the packaging industry. 3D based printing techniques such as FDM and ink jetting can use cellulose materials to reduce the production of toxic materials and to provide better quality 3D printed objects. The adoption of wood based and cellulose materials for 3D printing in packaging is gaining popularity because of it is an abundant, economically viable and sustainable material, which can revolutionize the entire industry. This nozzle design can be utilized easily for printing packaging parts using wood and cellulose based material which can be printed by utilizing this nozzle concept one such example can be seen can be seen in **Figure 21.**

This prototype still needs to be built and tested practically, so there is a need for developing slicer software interface which can utilize this prototype printing method to slice 3D objects and provide the user capability to customize slice settings based on die he will be using

during print. Nozzle printing process can be enhanced by a providing it more degree of freedom along printing axis and can also be used as addon with manipulator for working which will give it much more capabilities to print from various angle's reference planes. This prototype concept can be used for various other industries such as construction, food, textile, furniture, and many others.

Wooden based, biopolymers and cellulose based derivatives have been studied extensively in literature. Wood and cellulose based products development in 3D printing relates to sustainability and renewable materials' development in order to fulfil the objectives of "green life," which aims at reducing carbon dioxide and greenhouse gases emissions, global warming, climate change, deforestation, etc. By utilizing derivates of cellulose can offer several advantages in this domain. With the development of additive manufacturing technology , use of wooden based materials is also increasing at an accelerating rate due to unique properties that include sustainability, biodegradability, high dissolution capacity, non-toxic and hydrophilicity As mentioned in literature , wooden and cellulose materials had been used in medicine, biomedical engineering, electronics, and textile and fashion industry as well as energy storage.

Cellulose materials have wide ranging applications in the packaging industry and they can improve product performance by replacing non-renewable materials that are responsible of greenhouse emissions, global warming, climate change and destruction of the environment. Cellulose materials are organic, eco-friendly and abundantly available. The packaging sector can significantly benefit from the cellulose based 3D printing materials.

6 REFERENCES:

Carreño, N.L., Barbosa, A.M., Noremberg, B.S., Salas, M.M., Fernandes, S.C. and Labidi, J., 2017. Advances in Nanostructured Cellulose-based Biomaterials. Advances in Nanostructured Cellulose-based Biomaterials, Springer, Cham., (pp. 1-32).

Chung JHY, Naficy S, Yue ZL, Kapsa R, Quigley A, Moulton SE, Wallace GG, 2013. Bio-ink properties and printability for extrusion printing living cells. Biomater Sci 1(7):763–773.

Compton, B.G. and Lewis, J.A., 2014. 3D-printing of lightweight cellular composites. Advanced materials, 26(34), pp.5930-5935.

Correa, D., Papadopoulou, A., Guberan, C., Jhaveri, N., Reichert, S., Menges, A., & Tibbits, S., 2015. 3D-printed wood: programming hygroscopic material transformations. 3D Printing and Additive Manufacturing, 2(3), 106-116.

Dai, L., Cheng, T., Duan, C., Zhao, W., Zhang, W., Zou, X., Aspler, J. and Ni, Y., 2018. 3D printing using plant-derived cellulose and its derivatives: A review. Carbohydrate polymers.

Dayagi, Y., Benichou, A. and Kritchman, E., Xjet Ltd, 2016. Support ink for three-dimensional (3d) printing. U.S. Patent Application 15/029,854.

Despeisse, M., Baumers, M., Brown, P., Charnley, F., Ford, S.J., Garmulewicz, A., Knowles, S., Minshall, T.H.W., Mortara, L., Reed-Tsochas, F.P. and Rowley, J., 2017. Unlocking value for a circular economy through 3D printing: A research agenda. Technological Forecasting and Social Change, 115, pp.75-84.

Faludi, J., Hu, Z., Alrashed, S., Braunholz, C., Kaul, S. and Kassaye, L., 2015. Does material choice drive sustainability of 3D printing. International Journal of Mechanical, Aerospace, Industrial, Mechatronic and Manufacturing Engineering, 9(2), pp.14-33.

Feng X, Yang Z, Chmely S, Wang Q, Wang S, Xie Y (2017) Lignin-coated cellulose nanocrystal filled methacrylate composites prepared via 3d stereolithography printing: mechanical reinforcement and thermal stabilization. Carbohydr Polym 169:272–281

Feng, X., Yang, Z., Rostom, S.S., Dadmun, M., Wang, S., Wang, Q. and Xie, Y., 2018. Reinforcing 3D printed acrylonitrile butadiene styrene by impregnation of methacrylate resin and cellulose nanocrystal mixture: Structural effects and homogeneous properties. Materials & Design, 138, pp.62-70.

Ford, S. and Despeisse, M., 2016. Additive manufacturing and sustainability: an exploratory study of the advantages and challenges. Journal of Cleaner Production, 137, pp.1573-1587.

Fu, K., Yao, Y., Dai, J., & Hu, L. (2017). Progress in 3D printing of carbon materials for energy-related applications. Advanced Materials, 29, 1603486.

Gebler, M., Uiterkamp, A.J.S. and Visser, C., 2014. A global sustainability perspective on 3D printing technologies. Energy Policy, 74, pp.158-167.

Gross, B.C., Erkal, J.L., Lockwood, S.Y., Chen, C. and Spence, D.M., 2014. Evaluation of 3D printing and its potential impact on biotechnology and the chemical sciences.

Gunasekera DH, Kuek S, Hasanaj D, He Y, Tuck C, Croft AK, Wildman RD (2016) Three-dimensional ink-jet printing of biomaterials using ionic liquids and co-solvents. Faraday Discuss 190:509–523.

Håkansson, K. M., Henriksson, I. C., de la Peña Vázquez, C., Kuzmenko, V., Markstedt, K., Enoksson, P., & Gatenholm, P. (2016). Solidification of 3D printed nanofibril hydrogels into functional 3D cellulose structures. Advanced Materials Technologies, 1(7), 1600096.

Hausmann, M.K., Ruhs, P.A., Siqueira, G., Läuger, J., Libanori, R., Zimmermann, T. and Studart, A.R., 2018. Dynamics of cellulose nanocrystal alignment during 3D Printing. ACS nano, 12(7), pp.6926-6937.

Henke, K., & Treml, S., 2013. Wood based bulk material in 3D printing processes for applications in construction. European Journal of Wood and Wood Products, 71, 139–141.

Ihl, C. and Piller, F., 2016. 3D printing as driver of localized manufacturing: Expected benefits from producer and consumer perspectives. In The Decentralized and Networked Future of Value Creation, Springer, Cham., (pp. 179-204).

Jia, C., Bian, H., Gao, T., Jiang, F., Kierzewski, I.M., Wang, Y., Yao, Y., Chen, L., Shao, Z., Zhu, J.Y. and Hu, L., 2017. Thermally stable cellulose nanocrystals toward high-performance 2D and 3D nanostructures. ACS applied materials & interfaces, 9(34), pp.28922-28929.

Jo, W., Kim, D. H., Lee, J. S., Lee, H. J., & Moon, M. W. (2014). 3D printed tactile pattern formation on paper with thermal reflow method. RSC Advances, 4, 31764–31770

Kariz M, Sernek M, Kuzman MK., 2015. Use of wood powder and adhesive as a mixture for 3d printing. Eur J Wood Wood Prod 74(1):123–126. https://doi.org/10.1007/ s00107-015-0987-9

Kariz, M., Sernek, M. and Kuzman, M.K., 2016. Use of wood powder and adhesive as a mixture for 3D printing. European journal of wood and wood products, 74(1), pp.123-126.

Kariz, M., Sernek, M., Obućina, M. and Kuzman, M.K., 2018. Effect of wood content in FDM filament on properties of 3D printed parts. Materials Today Communications, 14, pp.135-140.

Khaled, S. A., Burley, J. C., Alexander, M. R., & Roberts, C. J., 2014. Desktop 3D printing of controlled release pharmaceutical bilayer tablets. International Journal of Pharmaceutics, 461, 105–111.

Khaled, S. A., Burley, J. C., Alexander, M. R., Yang, J., & Roberts, C. J., 2015 a. 3D printing of five-in-one dose combination polypill with defined immediate and sustained release profiles. Journal of Controlled Release, 217, 308–314.

Khaled, S. A., Burley, J. C., Alexander, M. R., Yang, J., & Roberts, C. J., 2015 b. 3D printing of tablets containing multiple drugs with defined release profiles. International Journal of Pharmaceutics, 494, 643–650.

Kumar S, Hofmann M, Steinmann B, Foster EJ, Weder C, 2012. Reinforcement of stereolithographic resins for rapid prototyping with cellulose nanocrystals. ACS Appl Mater Interfaces 4(10):5399–5407. https://doi.org/10.1021/ am301321v

Kumar, R., 2019. Research methodology: A step-by-step guide for beginners. Sage Publications Limited.

Kuzmenko, V., Karabulut, E., Pernevik, E., Enoksson, P. and Gatenholm, P., 2018. Tailor-made conductive inks from cellulose nanofibrils for 3D printing of neural guidelines. Carbohydrate polymers, 189, pp.22-30.

Le Duigou, A., Castro, M., Bevan, R., & Martin, N., 2016. 3D printing of wood fibre biocomposites: From mechanical to actuation functionality. Materials & Design, 96, 106-114.

Li, L., Zhu, Y. and Yang, J., 2018. 3D bioprinting of cellulose with controlled porous structures from NMMO. Materials Letters, 210, pp.136-138.

Li, L., Zhu, Y., & Yang, J., 2018. 3D bioprinting of cellulose with controlled porous structures from NMMO. Materials Letters, 210, 136–138.

Li, T.I.N.G.J.I.E., Aspler, J.O.S.E.P.H., Kingsland, A.R.L.E.N.E., Cormier, L.M. and Zou, X.U.E.J.U.N., 2016. 3d printing–A review of technologies, markets, and opportunities for the forest industry. J. Sci. Technol. For. Prod. Process, 5(2), p.30.

Li, V.C.F., Dunn, C.K., Zhang, Z., Deng, Y. and Qi, H.J., 2017. Direct ink write (DIW) 3D printed cellulose nanocrystal aerogel structures. Scientific reports, 7(1), p.8018.

Ligon, S. C., Liska, R., Stampfl, J., Gurr, M., & Mülhaupt, R. 2017. Polymers for 3D printing and customized additive manufacturing. Chemical reviews, 117(15), 10212-10290.

Liu, Z., Jiang, Q., Zhang, Y., Li, T. and Zhang, H.C., 2016, June. Sustainability of 3D printing: a critical review and recommendations. In ASME 2016 11th International Manufacturing Science and Engineering Conference (pp. V002T05A004-V002T05A004). American Society of Mechanical Engineers.

Mariotti, C., Alimenti, F., Roselli, L., & Tentzeris, M. M., 2017. High-performance RF devices and components on flexible cellulose substrate by vertically integrated additive manufacturing technologies. IEEE Transactions on Microwave Theory and Techniques, 65, 62–71.

Markstedt, K., Sundberg, J. and Gatenholm, P., 2014. 3D bioprinting of cellulose structures from an ionic liquid. 3D Printing and Additive Manufacturing, 1(3), pp.115-121.

Markstedt, K., Sundberg, J., & Gatenholm, P., 2014. 3D bioprinting of cellulose structures from an ionic liquid. 3D Printing and Additive Manufacturing, 1, 115–121

Maroni, A., Zema, L., Cerea, M., Foppoli, A., Palugan, L., & Gazzaniga, A.,2016. Erodible drug delivery systems for time-controlled release into the gastrointestinal tract. Journal of Drug Delivery Science and Technology, 32, 229–235.

McAlister, C. and Wood, J., 2014. The potential of 3D printing to reduce the environmental impacts of production. Proceeding of the ECEEE, pp.213-221.

Melocchi, A., Parietti, F., Loreti, G., Maroni, A., Gazzaniga, A., & Zema, L., 2015. 3D printing by fused deposition modeling (FDM) of a swellable/erodible capsular device for oral pulsatile release of drugs. Journal of Drug Delivery Science and Technology, 30, 360–367.

Montalvo Navarrete JI, Hidalgo-Salazar MA, Escobarnunez E, Rojas Arciniegas AJ.,2017. Thermal and mechanical behavior of biocomposites using additive manufacturing. Int J Interact Des Manuf (IJIDeM).

Murphy, C.A. and Collins, M.N., 2018. Microcrystalline cellulose reinforced polylactic acid biocomposite filaments for 3D printing. Polymer Composites, 39(4), pp.1311-1320.

Murshed, F. and Zhang, Y., 2016. Thinking orientation and preference for research methodology. Journal of Consumer Marketing, 33(6), pp.437-446.

Muth, J.T., Vogt, D.M., Truby, R.L., Mengüç, Y., Kolesky, D.B., Wood, R.J. and Lewis, J.A., 2014. Embedded 3D printing of strain sensors within highly stretchable elastomers. Advanced Materials, 26(36), pp.6307-6312.

Nechyporchuk O, Belgacem MN, Pignon F., 2016. Current progress in rheology of cellulose nanofibril suspensions. Biomacromol 17(7):2311–2320.

Nechyporchuk, O., Belgacem, M.N. and Bras, J., 2016. Production of cellulose nanofibrils: A review of recent advances. Industrial Crops and Products, 93, pp.2-25.

Niaki, M.K., Torabi, S.A. and Nonino, F., 2019. Why Manufacturers Adopt Additive Manufacturing Technologies: The Role of Sustainability. Journal of Cleaner Production.

Niaz, M. and Rivas, M., 2016. Students' understanding of research methodology in the context of dynamics of scientific progress. Springer.

Osong, S.H., Norgren, S. and Engstrand, P., 2016. Processing of wood-based microfibrillated cellulose and nanofibrillated cellulose, and applications relating to papermaking: a review. Cellulose, 23(1), pp.93-123.

Pakkanen J, Manfredi D, Minetola P, Iuliano L., 2017. About the use of recycled or biodegradable filaments for sustainability of 3d printing. In: International conference on sustainable design and manufacturing. Springer, pp 776–785

Pakkanen, J., Manfredi, D., Minetola, P. and Iuliano, L., 2017, April. About the use of recycled or biodegradable filaments for sustainability of 3D printing. In International Conference on Sustainable Design and Manufacturing, Springer, Cham., pp. 776-785.

Palaganas, N.B., Mangadlao, J.D., de Leon, A.C.C., Palaganas, J.O., Pangilinan, K.D., Lee, Y.J. and Advincula, R.C., 2017. 3D printing of photocurable cellulose nanocrystal composite for fabrication of complex architectures via stereolithography. ACS applied materials & interfaces, 9(39), pp.34314-34324.

Pandey, K., 2015. Natural fiber Composites for 3D printing.

Park, J. S., Kim, T., & Kim, W. S.,2017. Conductive cellulose composites with low percolation threshold for 3D printed electronics. Scientific Reports, 7, 3246.

Patten, M.L. and Newhart, M., 2017. Understanding research methods: An overview of the essentials. Routledge.

Pattinson, S. W., & Hart, A. J.,2017. Additive manufacturing of cellulosic materials with robust mechanics and antimicrobial functionality. Advanced Materials & Technologies, 2, 1600084.

Peng, T., Kellens, K., Tang, R., Chen, C. and Chen, G., 2018. Sustainability of additive manufacturing: An overview on its energy demand and environmental impact. Additive Manufacturing, 21, pp.694-704.

Pietrzak, K., Isreb, A., & Alhnan, M. A. (2015). A flexible-dose dispenser for immediate and extended release 3D printed tablets. European Journal of Pharmaceutics and Biopharmaceutics, 96, 380–387

Prakash, S., Bhandari, B.R., Godoi, F.C. and Zhang, M., 2019. Future Outlook of 3D Food Printing. In Fundamentals of 3D Food Printing and Applications (pp. 373-381). Academic Press.

Reynolds, T. D., Gehrke, S. H., Hussain, A. S., & Shenouda, L. S., 1998. Polymer erosion and drug release characterization of hydroxypropyl hethylcellulose matrices. Journal of Pharmaceutical Sciences, 87, 1115–1123.

Sadia, M., Alhnan, M.A., Ahmed, W. and Jackson, M.J., 2018. 3D Printing of Pharmaceuticals. In Micro and Nanomanufacturing Volume II, Springer, Cham., (pp. 467-498).

Sannino, A., Demitri, C., & Madaghiele, M., 2009. Biodegradable cellulose-based hydrogels: Design and applications. Materials, 2, 353

Sethi, S., Tumane, R. and Panghal, A., 2018. 3D Printing In Food Processing Industries-A Pathway To Innovations. Journal of Global Economy, 14(4), pp.61-70.

Shao, Y., Chaussy, D., Grosseau, P. and Beneventi, D., 2015. Use of microfibrillated cellulose/lignosulfonate blends as carbon precursors: impact of hydrogel rheology on 3D printing. Industrial & Engineering Chemistry Research, 54(43), pp.10575-10582.

Shatkin, J.A., Wegner, T.H., Bilek, E.T. and Cowie, J., 2014. Market projections of cellulose nanomaterial-enabled products-Part 1: Applications. TAPPI JOURNAL, Volume 13, Number 5, 2014; pp. 9-16., 13(5), pp.9-16.

Shin, S. and Hyun, J., 2017. Matrix-assisted three-dimensional printing of cellulose nanofibers for paper microfluidics. ACS applied materials & interfaces, 9(31), pp.26438-26446.

Siqueira, G., Kokkinis, D., Libanori, R., Hausmann, M.K., Gladman, A.S., Neels, A., Tingaut, P., Zimmermann, T., Lewis, J.A. and Studart, A.R., 2017. Cellulose nanocrystal inks for 3D printing of textured cellular architectures. Advanced Functional Materials, 27(12), p.1604619.

Sultan, S., Siqueira, G., Zimmermann, T., & Mathew, A. P.,2017. 3D printing of Nano-cellulosic biomaterials for medical applications. Current Opinion in Biomedical Engineering, 2, 29-34.

Tanwilaisiri, A., Zhang, R., Xu, Y., Harrison, D., & Fyson, J., 2016. A manufacturing process for an energy storage device using 3D printing. 2016. IEEE international conference on industrial technology (ICIT)888–891.

Tao, Y., Wang, H., Li, Z., Li, P. and Shi, S.Q., 2017. Development and application of wood flour-filled polylactic acid composite filament for 3D printing. Materials, 10(4), p.339.

Tian, P., Yang, F., Yu, L. P., Lin, M. M., Lin, W., Lin, Q. F., ... & Chen, Y. Z., 2019. Applications of excipients in the field of 3D printed pharmaceuticals. Drug development and industrial pharmacy, (just-accepted), 1-25.

Tran TN, Bayer IS, Heredia-Guerrero JA, Frugone M, Lagomarsino M, Maggio F, Athanassiou A., 2017. Cocoa shell waste biofilaments for 3d printing applications. Macromol Mater Eng 302(11):1700219.

Van Wijk, A.J.M. and van Wijk, I., 2015. 3D printing with biomaterials: Towards a sustainable and circular economy. IOS press.

Vanmaele, L., Daems, E., De Voeght, F. and Van Thillo, E., Agfa Graphics NV, 2012. 3D-inkjet printing methods. U.S. Patent 8,142,860.

Vithani, K., Goyanes, A., Jannin, V., Basit, A.W., Gaisford, S. and Boyd, B.J., 2019. An overview of 3D printing technologies for soft materials and potential opportunities for lipid-based drug delivery systems. Pharmaceutical research, 36(1), p.4.

Wach, R. A., Mitomo, H., Yoshii, F., & Kume, T.,2001. Hydrogel of biodegradable cellulose derivatives. II. Effect of some factors on radiation-induced crosslinking of CMC. Journal of Applied Polymer Science, 81, 3030–3037

Walliman, N., 2017. Research methods: The basics. Routledge.

Wang, Q., Sun, J., Yao, Q., Ji, C., Liu, J. and Zhu, Q., 2018. 3D printing with cellulose materials. Cellulose, 25(8), pp.4275-4301.

Wang, X., Jiang, M., Zhou, Z., Gou, J. and Hui, D., 2017. 3D printing of polymer matrix composites: A review and prospective. Composites Part B: Engineering, 110, pp.442-458.

Wimmer, R., Steyrer, B., Woess, J., Koddenberg, T. and Mundigler, N., 2015. 3D printing and wood. Pro Ligno, 11(4), pp.144-149.

Winter, A., Mundigler, N., Holzweber, J., Veigel, S., Müller, U., Kovalcik, A. and Gindl-Altmutter, W., 2017. Residual wood polymers facilitate compounding of micro fibrillated cellulose with poly (lactic acid) for 3D printer filaments. Philosophical Transactions of the Royal Society A: Mathematical, Physical and Engineering Sciences, 376(2112), p.20170046.

Xu, W., 2019. Three-dimensional printing of wood derived biopolymers towards biomedical applications

Xu, W., Pranovich, A., Uppstu, P., Wang, X., Kronlund, D., Hemming, J., Öblom, H., Moritz, N., Preis, M., Sandler, N. and Willför, S., 2018 a. Novel biorenewable composite of wood polysaccharide and polylactic acid for three-dimensional printing. Carbohydrate polymers, 187, pp.51-58.

Xu, W., Wang, X., Sandler, N., Willför, S. and Xu, C., 2018 b. Three-dimensional printing of wood-derived biopolymers: A review focused on biomedical applications. ACS sustainable chemistry & engineering, 6(5), pp.5663-5680.

Zhang, J., Feng, X., Patil, H., Tiwari, R. V., & Repka, M. A.,2017. Coupling 3D printing with hot-melt extrusion to produce controlled-release tablets. International Journal of Pharmaceutics, 519, 186–197.